Polo Estate 1998 ➤

Running gear, Axles, Steering

Edition 01.2000

Protected by copyright. Copying for private or commercial purposes, in part or in whole, is not permitted unless authorised by Volkswagen AG. Volkswagen AG does not guarantee or accept any liability with respect to the correctness of information in this document. Copyright by Volkswagen AG.

satelettronica

List of Workshop Manual Repair GroupsList of Workshop Manual Repair GroupsList of Workshop Manual Repair Groups

Polo Estate 1998 ➤

Running gear, Axles, Steering

Repair Group

00 - Technical data
40 - Front suspension
42 - Rear suspension
44 - Wheels, Tyres, Wheel alignment
48 - Steering

Protected by copyright. Copying for private or commercial purposes, in part or in whole, is not permitted unless authorised by Volkswagen AG. Volkswagen AG does not guarantee or accept any liability with respect to the correctness of information in this document. Copyright by Volkswagen AG.

satelettronica

Technical information should always be available to the foremen and mechanics, because their careful and constant adherence to the instructions is essential to ensure vehicle road-worthiness and safety. In addition, the normal basic safety precautions for working on motor vehicles must, as a matter of course, be observed.

All rights reserved.
No reproduction without prior agreement from publisher.

Copyright © 2011 Volkswagen AG, Wolfsburg

Contents

00 - Technical data . . . 1

1 **Technical data . . . 1**
1.1 Technical data . . . 1
1.2 Running gear Caddy . . . 1
1.3 Running gear Polo Classic, Polo Estate . . . 1
1.4 Steering . . . 1
1.5 Wheels, tyres . . . 1

40 - Front suspension . . . 2

1 **Servicing front suspension . . . 2**
1.1 Servicing front suspension . . . 2
1.2 Front axle - Overview . . . 2
1.3 I - Assembly overview, sub-frame, anti-roll bar and wishbone . . . 3
1.4 Checking swivel joint . . . 9
1.5 Removing and installing swivel joint . . . 10
1.6 Removing and installing wishbone . . . 12
1.7 Renewing bonded rubber mounting on wishbone>09.99 . . . 16
1.8 Renewing bonded rubber mounting on wishbone 10.99> . . . 19
1.9 Removing and installing subframe . . . 23
1.10 Reworking cap nut in side member . . . 27
1.11 II - Servicing wheel bearing . . . 29
1.12 Pressing front wheel bearing out and in with wheel bearing housing installed, 13" wheels . . 38
1.13 Pressing front wheel bearing out and in with wheel bearing housing installed, 14" wheels . . 43
1.14 III - Servicing front suspension strut, Caddy, Polo Classic, Polo Estate > 09.99 . . . 48
1.15 III - Servicing front suspension strut, Polo Classic, Polo Estate 10.99 > . . . 52

2 **Servicing drive shafts . . . 56**
2.1 Servicing drive shafts . . . 56
2.2 Removing and installing drive shafts . . . 56
2.3 IV - Servicing drive shaft with constant velocity joint . . . 59
2.4 Checking outer constant velocity joint . . . 70
2.5 Checking inner constant velocity joint . . . 72
2.6 V - Repairing drive shaft with tripod joint . . . 77
2.7 Dismantling and assembling triple roller joint . . . 81

42 - Rear suspension . . . 86

1 **Servicing rear axle, Caddy . . . 86**
1.1 Servicing rear axle, Caddy . . . 86
1.2 Removing and installing rear axle, Caddy . . . 86
1.3 Assembly overview rear axle (Caddy) . . . 90
1.4 Removing and installing leaf spring, Caddy . . . 97

2 **Servicing wheel bearings, Caddy >09.99 . . . 100**
2.1 Servicing wheel bearings, Caddy >09.99 . . . 100
2.2 Assembly overview, servicing wheel bearings, Caddy . . . 102
2.3 Installing seal to vehicles from vehicle identity No. 9KWR503258 . . . 108

3 **Servicing wheel bearings (Caddy) 10.99 > . . . 110**
3.1 Servicing wheel bearings (Caddy) 10.99 > . . . 110
3.2 Assembly overview, servicing wheel bearings, Caddy . . . 110
3.3 Removing and installing wheel bearing/wheel hub unit, vehicles with brake drums . . . 112

4 **Servicing rear axle, Polo Classic, Polo Estate . . . 117**
4.1 Servicing rear axle, Polo Classic, Polo Estate . . . 117
4.2 Removing and installing rear axle, Polo Classic, Polo Estate . . . 117
4.3 Assembly overview, rear axle beam (Polo Classic, Polo Estate > 09.99) . . . 120
4.4 Assembly overview, rear axle beam, Polo Classic, Polo Estate 10.00 > . . . 124

Copyright by Volkswagen AG. Volkswagen AG does not guarantee or accept any liability with respect to the correctness of information in this document.
Protected by copyright. Copying for private or commercial purposes, in part or in whole, is not permitted unless authorised by Volkswagen AG.
satelettronica

4.5 Removing and installing bonded rubber mounting, Polo Classic, Polo Estate> 09.99 129
4.6 Removing and installing, Polo Classic, Polo Estate 10.99 > 133
4.7 Removing hydraulic rubber bonded mounting, Polo Classic, Polo Estate 10.99 > 136
4.8 Dismantling and assembling suspension strut, Polo Classic, Polo Estate 137
4.9 Dismantling and assembling suspension strut, Polo Classic, Polo Estate 139

5 Servicing wheel bearings, Polo Classic, Polo Estate >09.99 142
5.1 Servicing wheel bearings, Polo Classic, Polo Estate >09.99 142
5.2 Assembly overview, servicing wheel bearings, Polo Classic, Polo Estate 143

6 Servicing wheel bearings, Polo Classic, Polo Estate > 10.99 149
6.1 Servicing wheel bearings, Polo Classic, Polo Estate > 10.99 149
6.2 Assembly overview, servicing wheel bearings, Polo Classic, Polo Estate 149
6.3 Removing and installing wheel bearing/hub unit on vehicles with drum brakes 152
6.4 Removing and installing wheel bearing/hub unit on vehicles with disc brakes 154

44 - Wheels, Tyres, Wheel alignment 158

1 Vehicle alignment 158
1.1 Vehicle alignment 158
1.2 Test prerequisites: 159
1.3 Preparations for measurements 160
1.4 Vehicle data sticker 161
1.5 Vehicle alignment specifications > 09.99 161
1.6 Vehicle alignment specifications 162
1.7 Adjusting front wheel camber 164
1.8 Adjusting front wheel toe 165
1.9 Checking left and right-hand wheel lock 165
1.10 Calculating the direction of travel: 166

48 - Steering 167

1 Steering column, column tube, steering wheel and airbag steering wheel> 09.99 167
1.1 Steering column, column tube, steering wheel and airbag steering wheel> 09.99 167
1.2 Removing and installing column tube with steering column 172
1.3 Removing and installing airbag unit 174
1.4 Removing and installing airbag steering wheel 175
1.5 Removing and installing centring ring with slip ring 176
1.6 Removing and installing column tube for height adjustable steering wheel 177

2 Airbag, steering wheel, steering column 179
2.1 Airbag, steering wheel, steering column 179
2.2 Removing and installing driver's airbag unit 179
2.3 Removing and installing steering wheel 182
2.4 Removing and installing coil connector with slip ring 184
2.5 Removing and installing column tube with steering column 184
2.6 Assembly overview, steering column, column tube 189
2.7 Dismantling column tube and steering column 194
2.8 Assembling column tube and steering column 197

3 Servicing power assisted steering 202
3.1 Servicing power assisted steering 202
3.2 Checking vane pump delivery pressure 202
3.3 Removing and installing power assisted steering box 203
3.4 Assembly overview: power assisted steering box (TRW) 212
3.5 Servicing TRW power-assisted steering 218
3.6 Dismantling and assembling power assisted steering box (TRW) 226
3.7 Adjusting power steering box when installed 241
3.8 Adjusting power steering box (with new rack) 243
3.9 Checking left-hand track rod length and if necessary adjusting 245

4 Assembly overview: vane pump, reservoir and hydraulic pipes > 09.99 245
4.1 Assembly overview: vane pump, reservoir and hydraulic pipes > 09.99 245

satelettronica

4.2 Removing and installing power-assisted steering vane pump, vehicles with 1.4 ltr. engine . . . 248
4.3 Removing and installing ribbed belt . . . 250
4.4 Removing and installing power-assisted steering vane pump, vehicles with 1.6 ltr. engine upwards . . . 251
4.5 Installing vane pump . . . 255
4.6 Tensioning V-belt . . . 257

5 Vane pump, reservoir, hydraulic pipes 10.99 > . . . 259
5.1 Vane pump, reservoir, hydraulic pipes 10.99 > . . . 259
5.2 Removing and installing vane pump; vehicles with low-mounted vane pump . . . 259
5.3 Removing and installing vane pump; vehicles with high-mounted vane pump . . . 262
5.4 Assembly overview: Vane pump with hydraulic pipes/hoses . . . 266
5.5 Assembly overview for low-mounted vane pump . . . 274
5.6 Assembly overview for high-mounted vane pump . . . 276

6 Definitions . . . 278
6.1 Definitions . . . 278

Protected by copyright. Copyright for private or commercial purposes, in part or in whole, is not permitted unless authorised by Volkswagen AG. Volkswagen AG does not guarantee or accept any liability with respect to the correctness of information in this document. Copyright by Volkswagen AG.
satelettronica

Protected by copyright. Copying for private or commercial purposes, in part or in whole, is not permitted unless authorised by Volkswagen AG. Volkswagen AG does not guarantee or accept any liability with respect to the correctness of information in this document. Copyright by Volkswagen AG.

satelettronica

00 - Technical data

1 - Technical data

1.1 - Technical data

1.2 - Running gear Caddy

Technical data for the Caddy 10.99 ‣ have not changed.

Model		Caddy Van/Kombi
Wheel base	mm	2601
Track, unladen	mm	1436 front,wheel offset 35 1452 rear,wheel offset 35
Turning circle	m	10.5

1.3 - Running gear Polo Classic, Polo Estate

Technical data for the Polo Classic, Polo Variant 10.99 ‣ have not changed.

Model		Polo Classic, Polo Estate
Wheel base	mm	2440
Track, unladen	mm	1429 front,wheel offset 38 1394 rear,wheel offset 38
Turning circle	m	10.9

1.4 - Steering

Model	All
Steering gear	Power steering gear
No. of turns of steering wheel from lock to lock	3.17

1.5 - Wheels, tyres

General information; information concerning wheels/tyre combinations, winter tyres, snow chains and recommended tyre manufacturers is found in "Fault finding wheels, tyres" binder.

satelettronica

40 - Front suspension

1 - Servicing front suspension

1.1 - Servicing front suspension

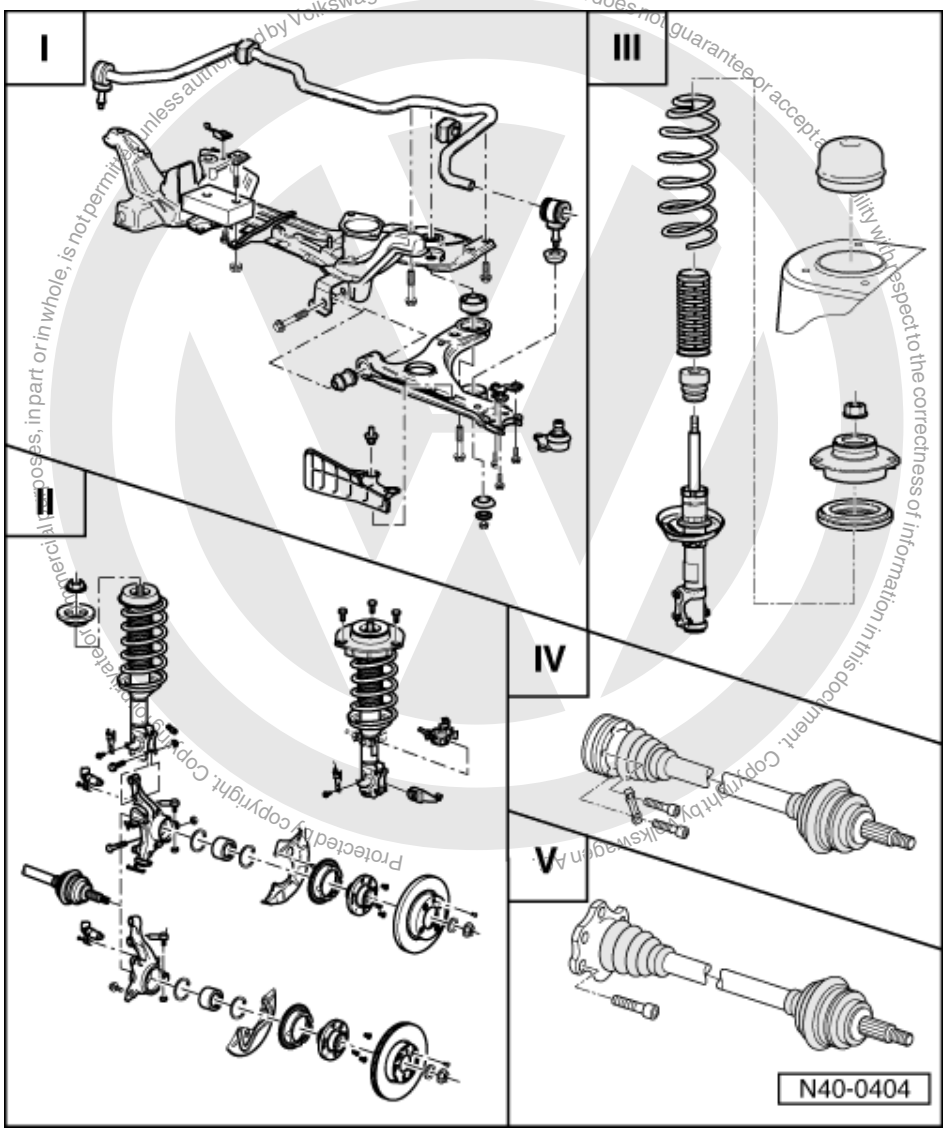

1.2 - Front axle - Overview

I - Assembly overview sub-frame, anti-roll bar and wishbone=> Page 3

II - Servicing wheel bearings => Page 29

III - Servicing front suspension strut, Caddy, Polo Classic, Polo Estate ‣ 09.99=> Page 48

satelettronica

III - Servicing front suspension strut, Polo Classic, Polo Estate 10.99 ▸=> Page 52

IV - Servicing drive shaft with constant velocity joint=> Page 59

V - Servicing drive shaft with tripod joint=> Page 77

1.3 - I - Assembly overview, sub-frame, anti-roll bar and wishbone

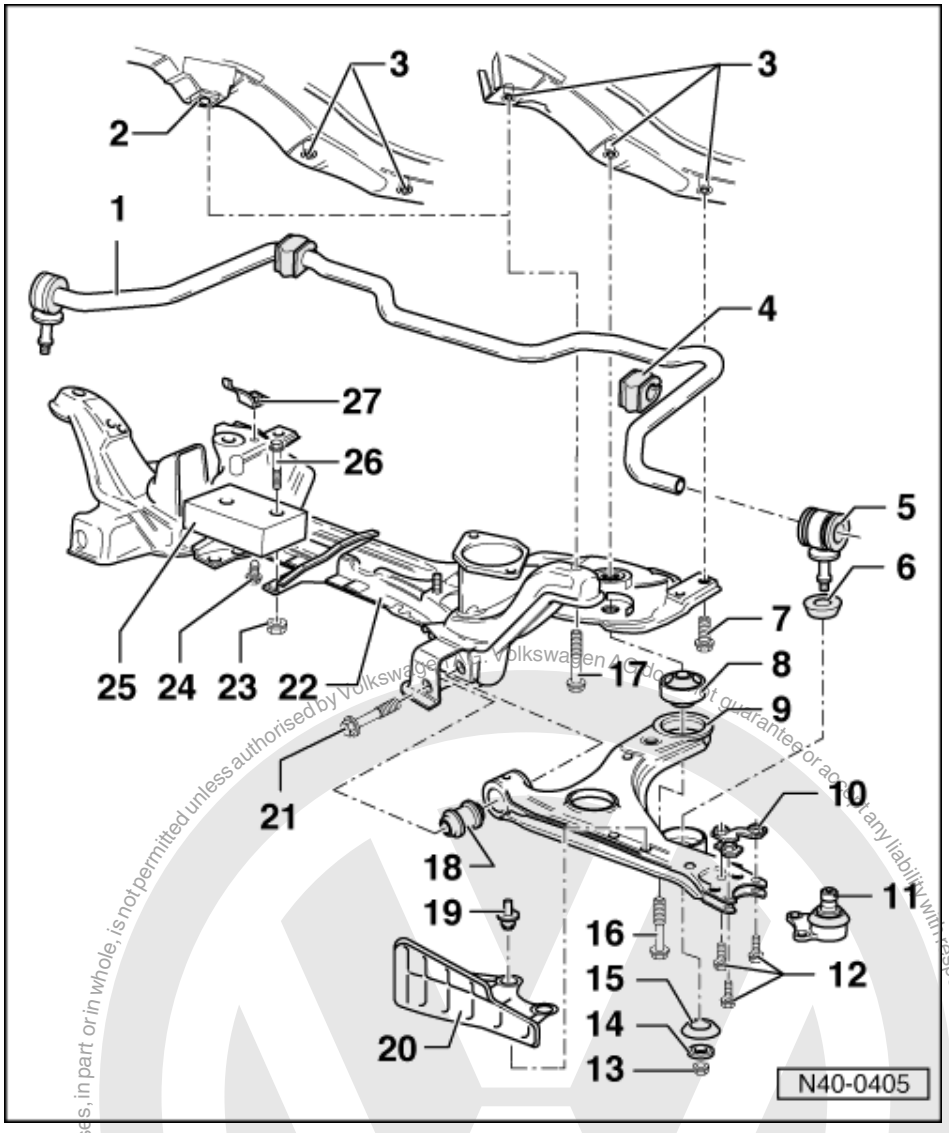

Notes:

- If a vehicle has to be moved after removing the drive shaft, first install outer joint and tighten to 50 Nm otherwise the wheel bearing will be damaged.
- It is not permitted to carry out welding and straightening operations on load bearing suspension components or those components which locate the wheels.
- Always renew self-locking nuts.
- Always renew corroded nuts/bolts.

1 Anti-roll bar
- Allocation

satelettronica
Protected by copyright. Copying for private or commercial purposes, in part or in whole, is not permitted unless authorised by Volkswagen AG. Volkswagen AG does not guarantee or accept any liability with respect to the correctness of information in this document. Copyright by Volkswagen AG.

=> Replacement parts catalogue

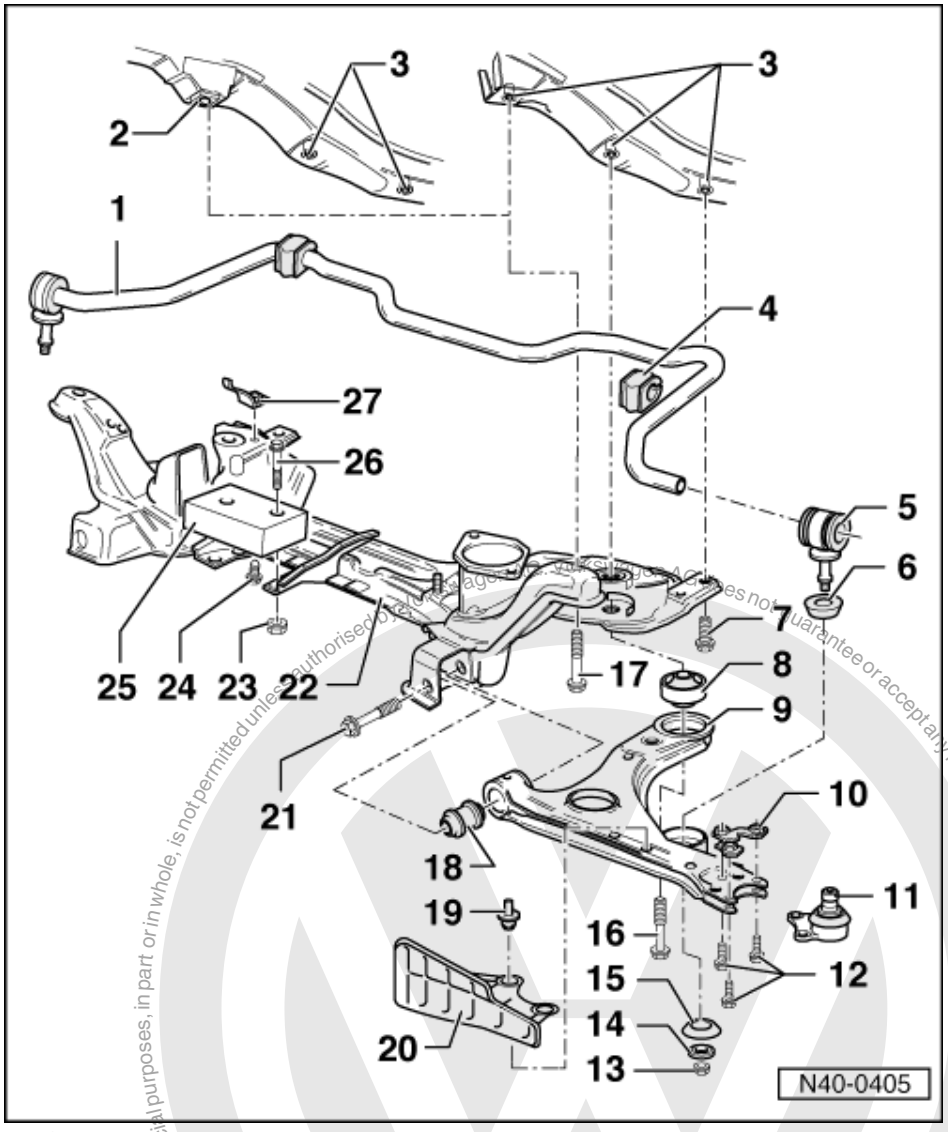

2 Captive nut
- Only on vehicles 10.99 ▸
  The captive nut cannot be reworked. If the nut is damaged, replace complete mounting bracket.

3 Cap nut
- Reworking in side member => Page 27

4 Rubber mounting
- Allocation

=> Replacement parts catalogue

5 Connecting link
- Allocation

=> Replacement parts catalogue

6 Connecting link mounting
- Conical side to wishbone

7 Hexagon bolt, 65 Nm

satelettronica

Protected copyright. Copyright by Volkswagen AG. Volkswagen AG does not guarantee or accept any liability with respect to the correctness of information in this document. Copying for private or commercial purposes, in part or in whole, is not permitted unless authorised by Volkswagen AG.

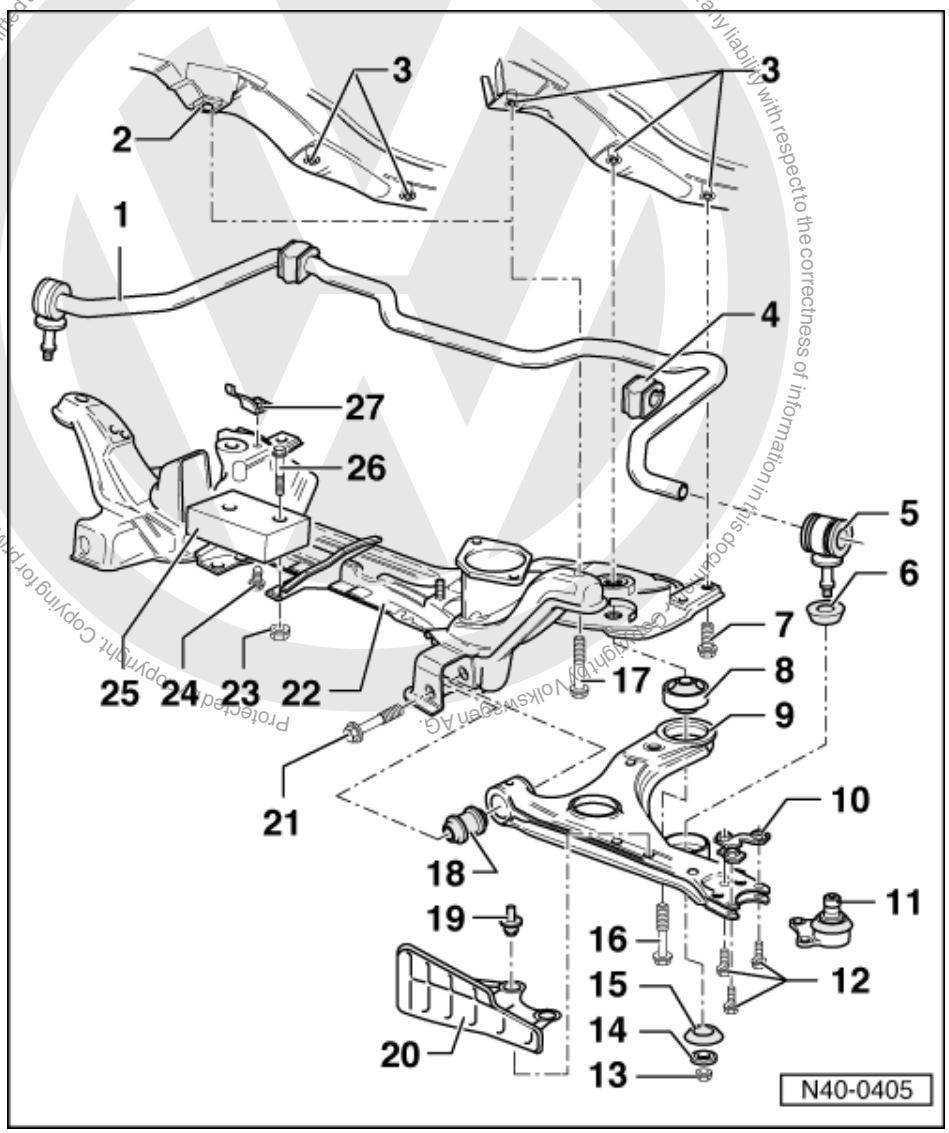

8 Rear wishbone mounting
- Allocation

=> Replacement parts catalogue

- Installation position ‣09.99 => Page 18
- Installation position 10.99 ‣=> Page 22
- Pressing out and in ‣09.99 => Page 19
- Pressing out and in 10.99 ‣=> Page 21

9 Wishbone
- Allocation

=> Replacement parts catalogue

- Removing and installing => Page 12

10 Plate with nuts
11 Swivel joint
- Checking => Page 9
- Removing and installing

satelettronica

=> Page 10

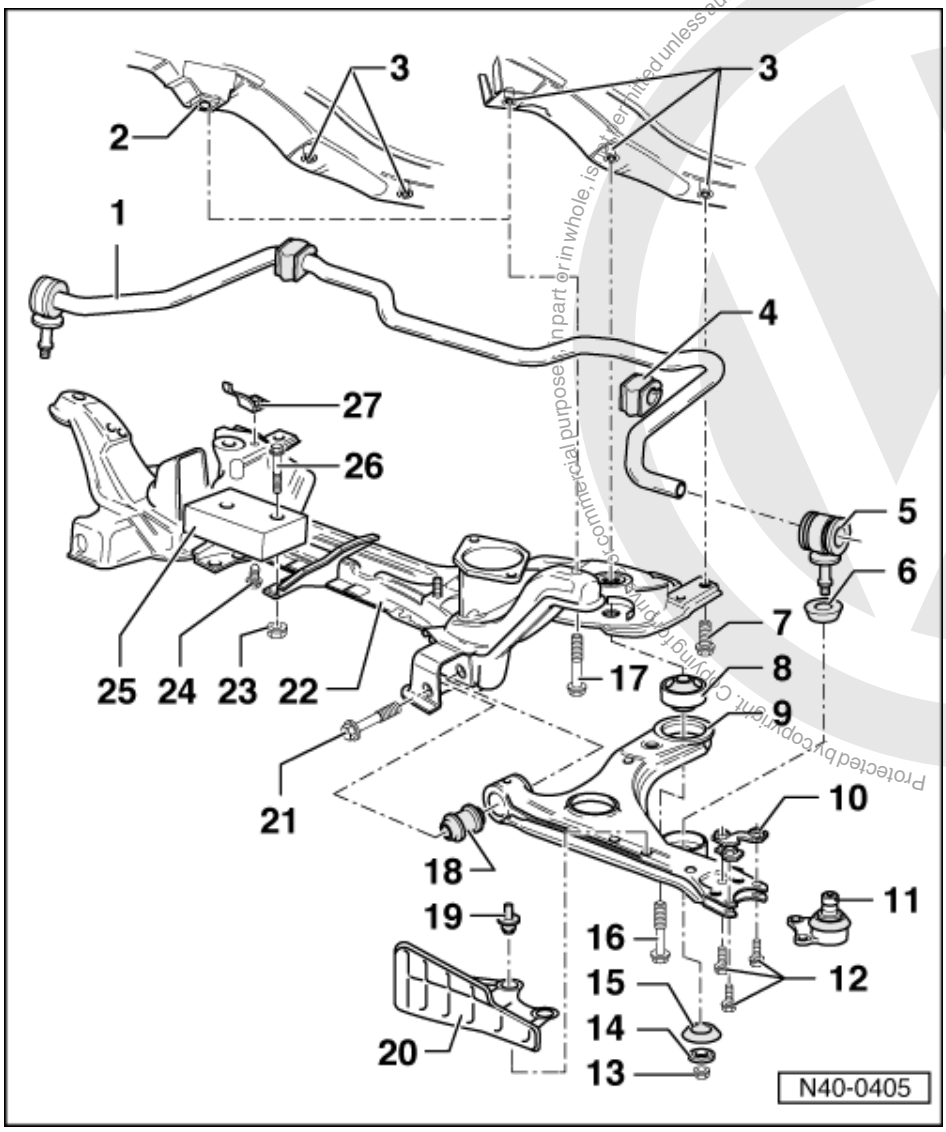

12 Hexagon bolt, 35 Nm

13 Self-locking hexagon nut, 25 Nm

14 Washer

- Collar faces away from mounting

15 Connecting link mounting

- Conical side to wishbone

16 Hexagon bolt
M 12 x 1.5 x 78

- 70 Nm and turn 90° further
- Renew each time after removing

17 Hexagon bolt
M 12 x 1.5 x 65

- 70 Nm and turn 90° further
- Renew each time after removing

Protected by copyright. Copying for commercial purposes, in part or in whole, is not permitted unless authorised by Volkswagen AG. Volkswagen AG does not guarantee or accept any liability with respect to the correctness of information in this document. Copyright by Volkswagen AG.
satelettronica

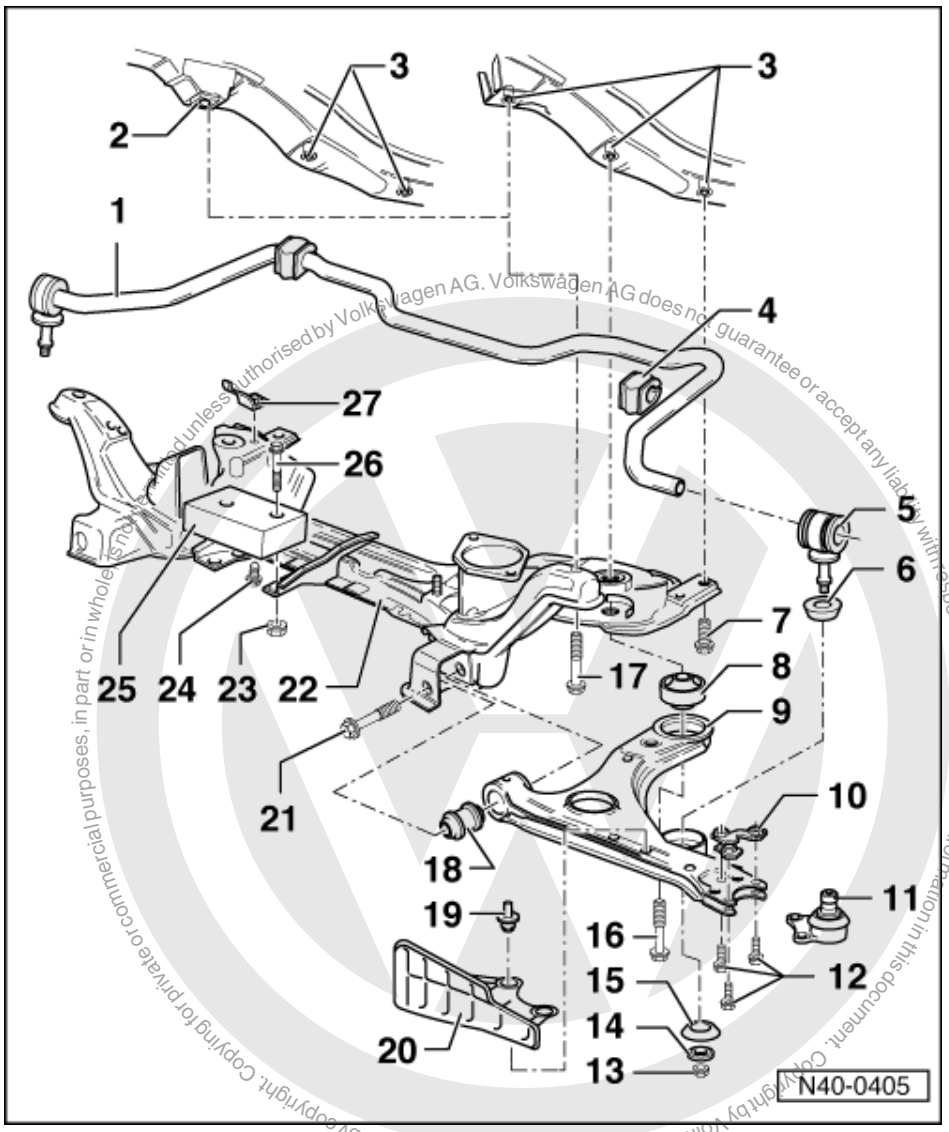

18 Front wishbone mounting
- Allocation

=> Replacement parts catalogue

- Pressing out ‣09.99 => Page 18
- Pressing out 10.99 ‣ => Page 21
- Pressing in ‣09.99 => Page 18
- Pressing in 10.99 ‣ => Page 21

19 Spreader rivet
- Only on Polo Classic, Polo Estate

20 Air deflector plate
- Only on Polo Classic, Polo Estate

21 Hexagon bolt
M 12 x 1.5 x 82
- 50 Nm and turn 90° further
- Renew each time after removing

satelettronica

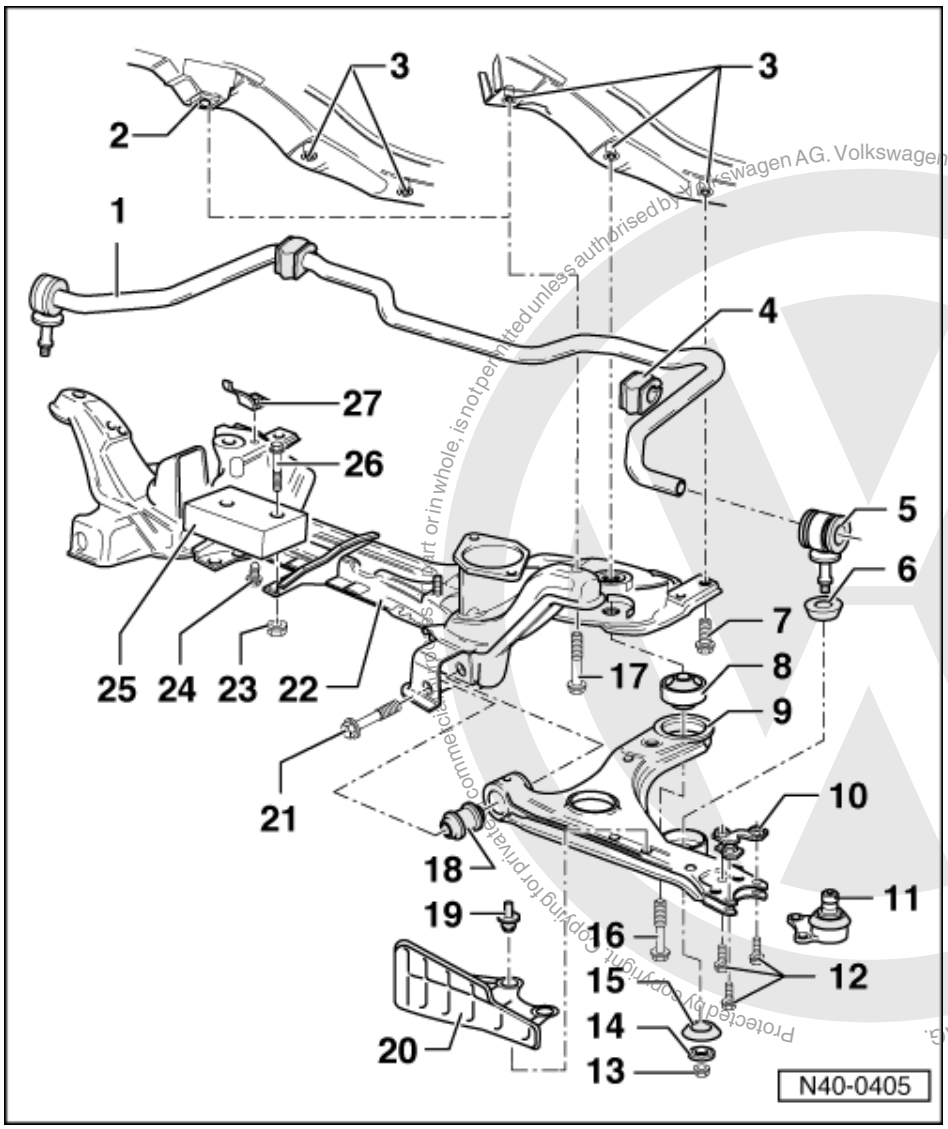

22 Sub-frame

- Removing and installing
  => Page 23

23 Self-locking hexagon nut, 25 Nm

- Renew each time after removing

24 Hexagon bolt, 25 Nm

- To secure anti-roll bar

25 Vibration damper

- Installation position:
  Install so that the larger dimension from front edge to holes is positioned forwards

26 Hexagon bolt

27 Anti-roll bar clamp

Protected by copyright. Copying for private or commercial purposes, in part or in whole, is not permitted unless authorised by Volkswagen AG. Volkswagen AG does not guarantee or accept any liability with respect to the correctness of information in this document. Copyright by Volkswagen AG.
satelettronica

1.4 - Checking swivel joint

Checking axial clearance

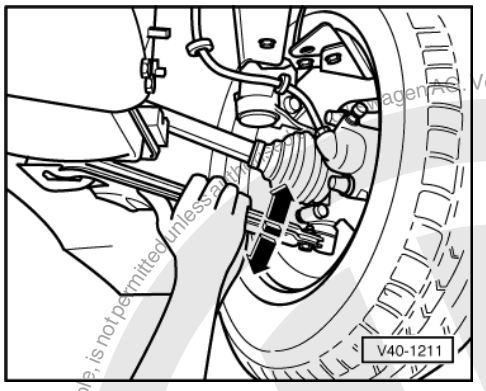

- -> Forcibly pull swivel joint down and press up again.

Checking radial play

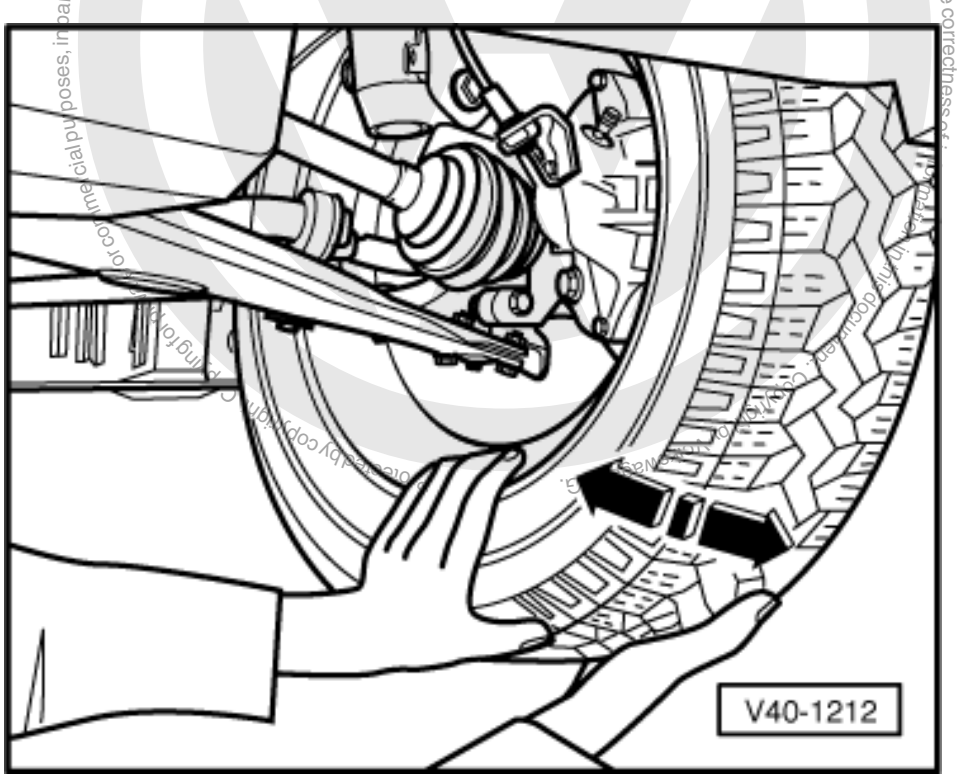

- -> Press lower part of wheel forcefully outwards and inwards.

Notes:

- There must be no perceptible or visual "play" when carrying out both tests.
- Observe ball joint during checks.
- Take into account possible existing wheel bearing play or "play" in upper suspension strut mounting.

satelettronica

1.5 - Removing and installing swivel joint

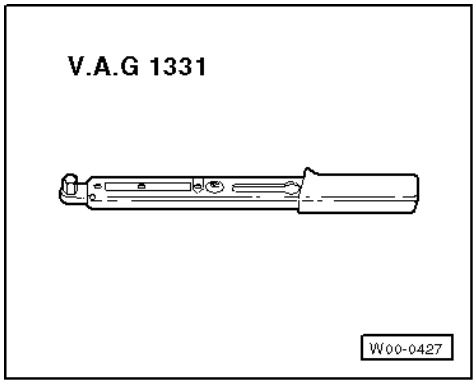

Special tools and workshop equipment required

- V.A.G 1331 Torque wrench

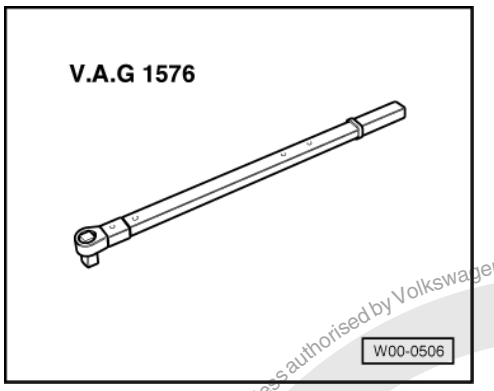

- V.A.G 1576 Torque wrench

Removing

- Lift vehicle until the load on the front axle is relieved.

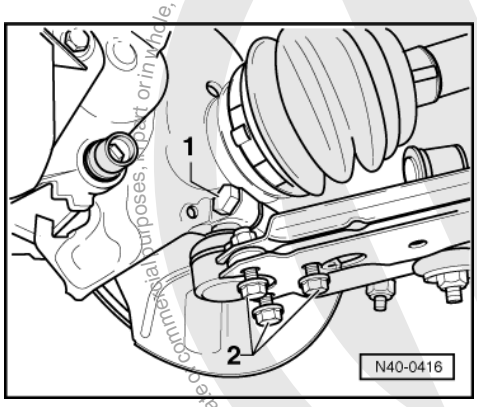

- Loosen drive shaft hexagon nut.
- Mark installation positions of swivel joint bolts on wishbone.

Vehicles with 13" wheels

- -> Remove bolts -1- and -2-.

Protected by copyright. Copying for private or commercial purposes, in part or in whole, is not permitted unless authorised by Volkswagen AG. Volkswagen AG does not guarantee or accept any liability with respect to the correctness of information in this document. Copyright by Volkswagen AG.
satelettronica

Vehicles with 14" wheels

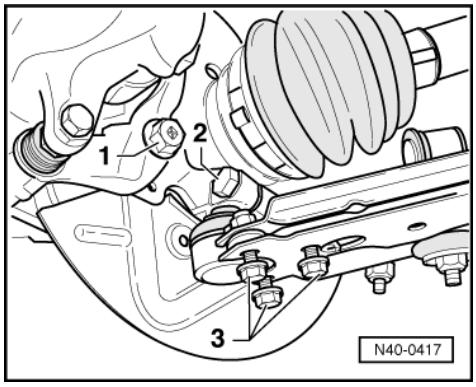

- -> Remove bolt -1- from brake caliper mounting.
- Remove bolts -2- and -3-.

Continued for all vehicles

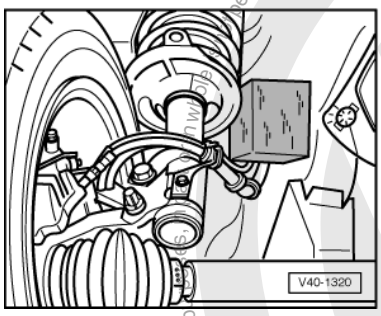

- -> Swing wheel with suspension strut outwards and support.
- Pull out swivel joint downwards.

Installing

- Fit swivel joint in wheel bearing housing and wishbone.

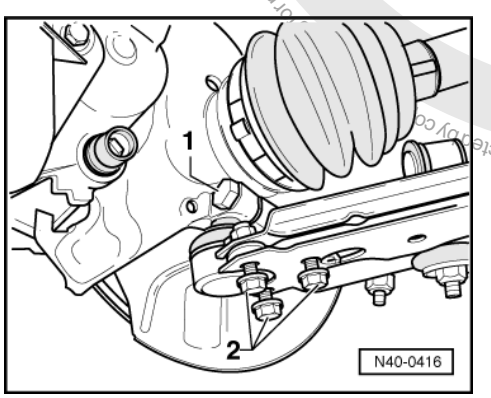

Vehicles with 13" wheels

- -> Tighten bolt -1- with new self-locking nut.
- Bolt swivel joint to wishbone (bolts -2- on old marks).

Protected by copyright. Copying for commercial purposes, distribution is not permitted unless authorised by Volkswagen AG. Volkswagen AG does not guarantee or accept any liability with respect to the correctness of information in this document. Copyright by Volkswagen AG.
satelettronica

Vehicles with 14" wheels

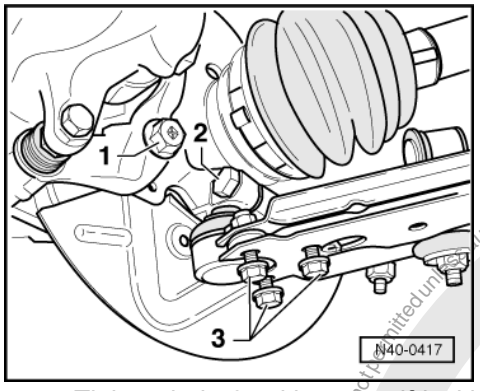

- -> Tighten bolt -2- with new self-locking nut.
- Clean ribs of self-locking combi-bolt -1- and fit.
- Bolt swivel joint to wishbone (bolts -3- on old marks).

Continued for all vehicles

Note:

Check bellows is not damaged or twisted.

- Lower vehicle until the wheels touch ground.
- Bolt drive shaft to wheel hub using new hexagon bolts.

Tightening torques

Swivel joint to wishbone	35 Nm
Swivel joint to wheel bearing housing	50 Nm
Hex nut for drive shaft to wheel hub	265 Nm
Combi-bolt to brake caliper mounting	125 Nm

1.6 - Removing and installing wishbone

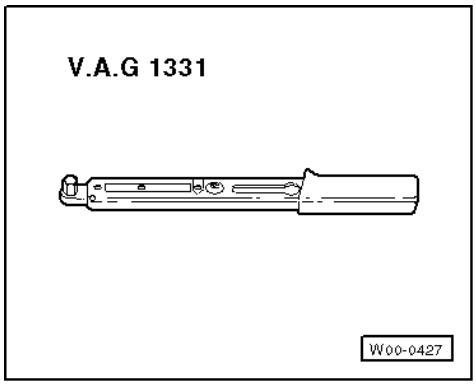

Special tools and workshop equipment required

- V.A.G 1331 Torque wrench

Protected by copyright. Copying for private or commercial purposes, in part or in whole, is not permitted unless authorised by Volkswagen AG. Volkswagen AG does not guarantee or accept any liability with respect to the correctness of information in this document. Copyright by Volkswagen AG.
satelettronica

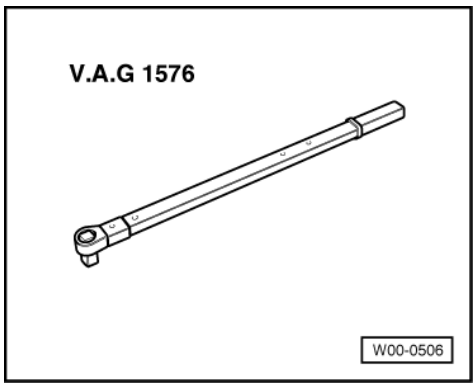

- V.A.G 1576 Torque wrench

Removing

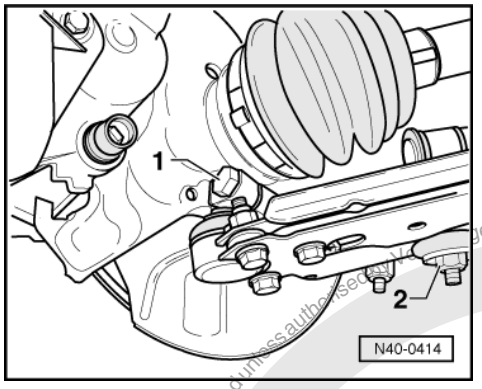

- Lift vehicle until the load on the front axle is relieved.
- Loosen drive shaft hexagon nut.

Vehicles with 13" wheels

- -> Remove bolt -1-.
- Unscrew nut -2- from coupling link/anti-roll bar.

Vehicles with 14" wheels

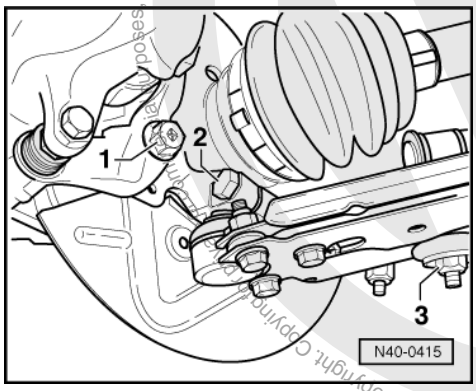

- -> Remove bolt -1- from brake calliper mounting and bolt -2- from wheel bearing housing.
- Unscrew nut -3- from coupling link/anti-roll bar.
- Pull wishbone together with swivel joint out of wheel bearing housing.
- Remove drive shaft from wheel bearing housing and tie up.

satelettronica

Continued for all vehicles

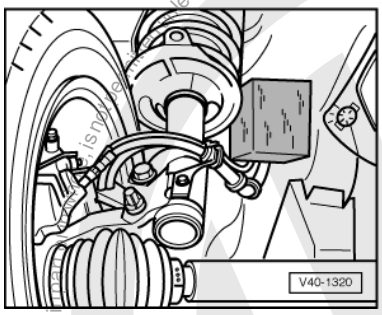

- -> Swing wheel with suspension strut outwards and support.

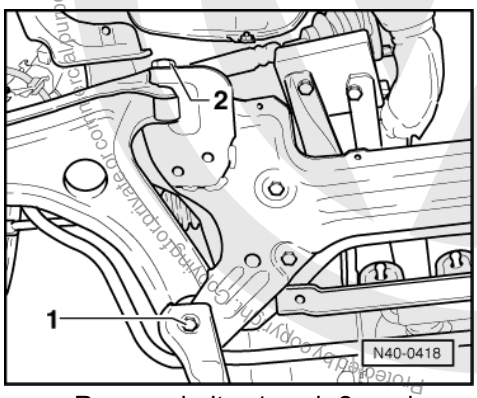

- -> Remove bolts -1-and -2- and remove wishbone.

Installing

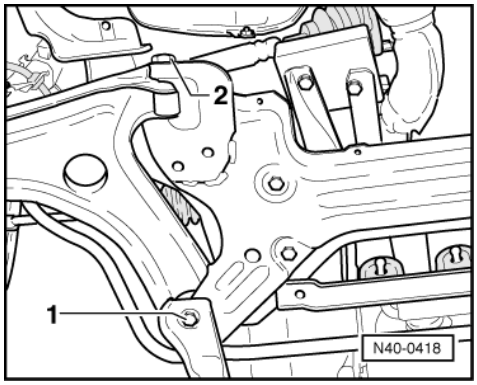

- -> Put wishbone in position and insert bolts -1- and -2-.
- Connect swivel joint to wheel bearing housing.

Volkswagen AG. Volkswagen AG does not guarantee or accept any liability with respect to the correctness of information in this document. Copyright by Volkswagen AG.
satelettronica

Vehicles with 13" wheels

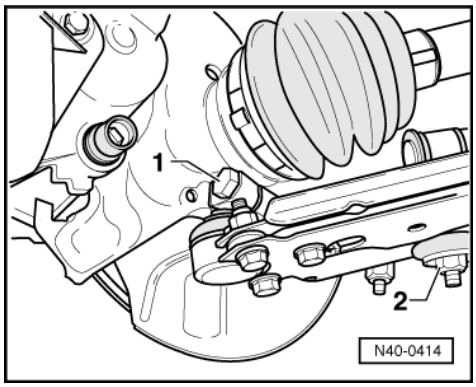

- -> Tighten bolt -1- with new self-locking nut.
- Tighten nut -2- on coupling link/anti-roll bar.

Vehicles with 14" wheels

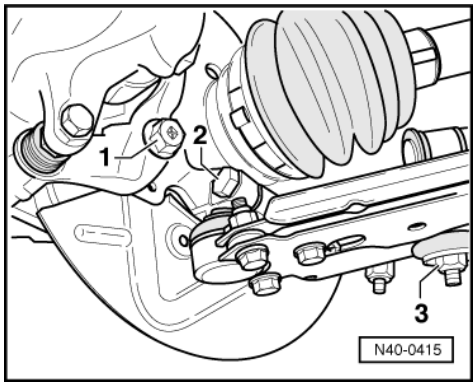

- -> Tighten bolt -2- with new self-locking nut.
- Clean ribs of self-locking combi-bolt -1- and insert.
- Screw nut -3- onto coupling joint/anti-roll bar.

Continued for all vehicles

Note:

Check bellows is not damaged or twisted.

- Lower vehicle until the wheels touch ground.
- Bolt drive shaft to wheel hub with new hexagon bolts.

Tightening torques

Swivel joint to wheel bearing housing	50 Nm
Hex nut for drive shaft to wheel hub	265 Nm
Combi-bolt to brake caliper mounting	125 Nm
Coupling joint/anti-roll bar to wishbone	25 Nm

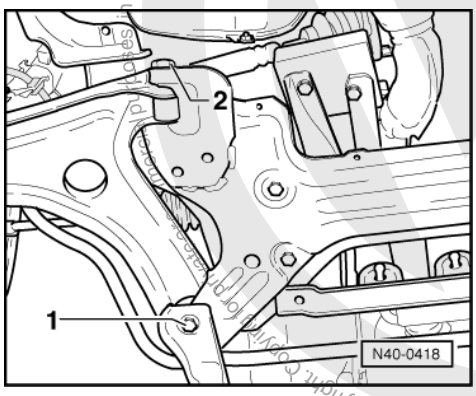

Protected by copyright. Copyright by Volkswagen AG.
Volkswagen AG does not guarantee or accept any liability with respect to the correctness of information in this document.
satelettronica

-> Wishbone to sub-frame

1 - 70 Nm + 90°
2 - 50 Nm + 90°

1.7 - Renewing bonded rubber mounting on wishbone>09.99

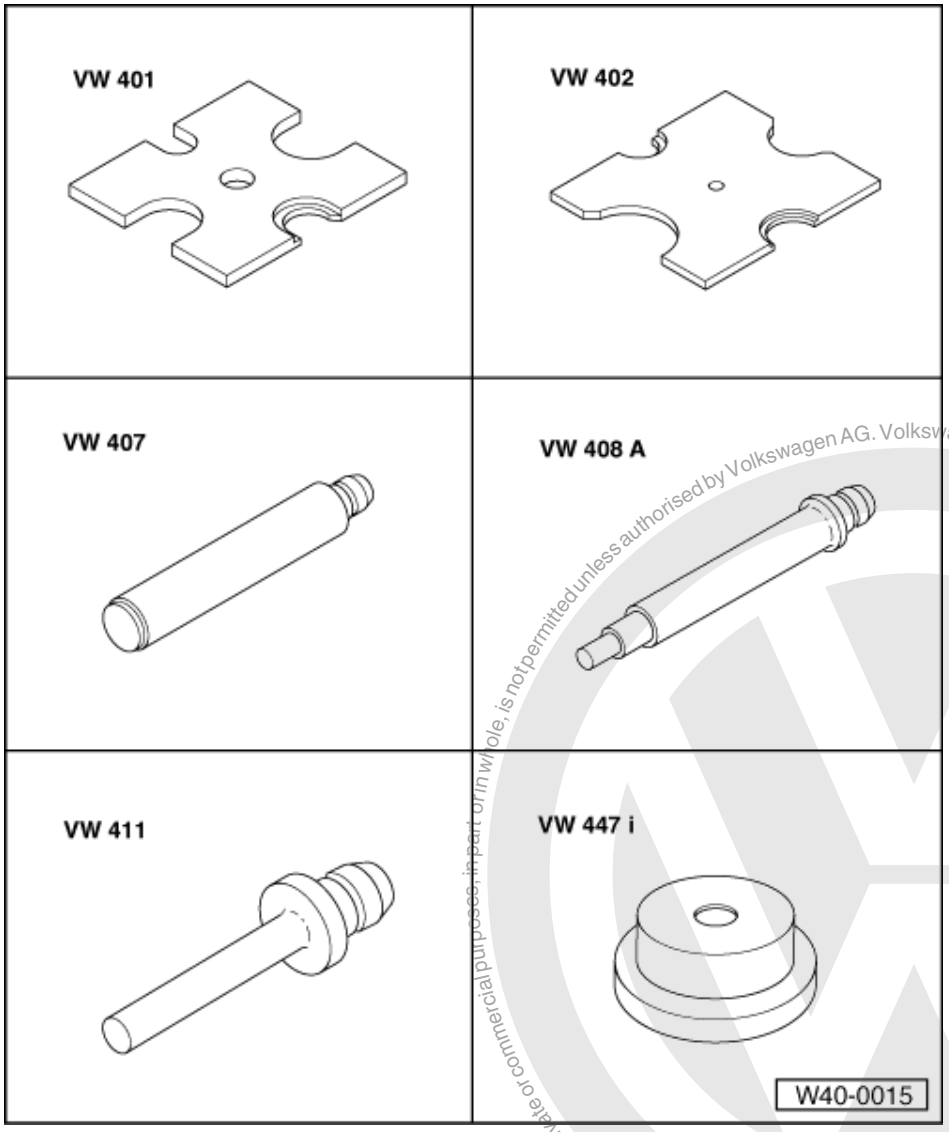

Special tools and workshop equipment required

- VW 401 Press plate
- VW 402 Press plate
- VW 407 Press tool
- VW 408 A Press tool
- VW 411 Press tool
- VW 447 i Thrust plate

Protected by copyright. Copying for private or commercial purposes, in part or in whole, is not permitted unless authorised by Volkswagen AG. Volkswagen AG does not guarantee or accept any liability with respect to the correctness of information in this document. Copyright by Volkswagen AG.
satelettronica

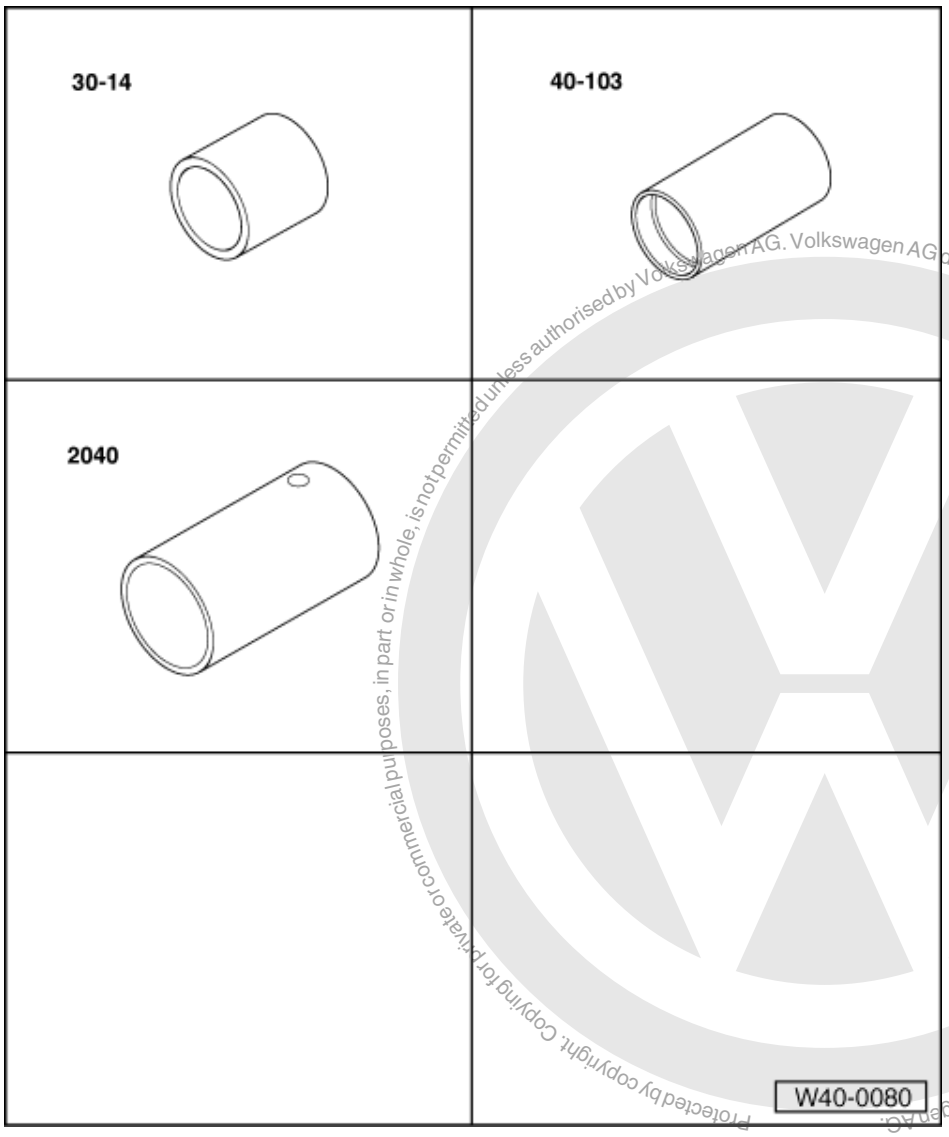

Protected by copyright. Copying for private or commercial purposes, in part or in whole, is not permitted unless authorised by Volkswagen AG. Volkswagen AG does not guarantee or accept any liability with respect to the correctness of information in this document. Copyright by Volkswagen AG.

satelettronica

Special tools and workshop equipment required

- 30-14 Tube
- 40-103 Support
- 2040 Tube

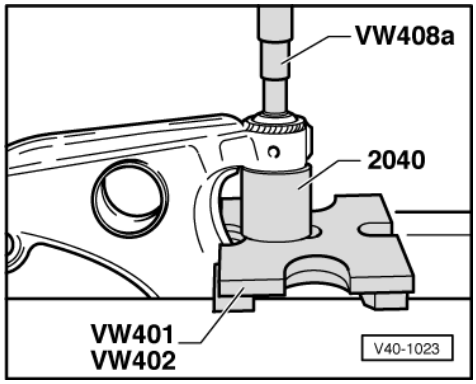

-> Fig.1 Pressing out front wishbone mounting

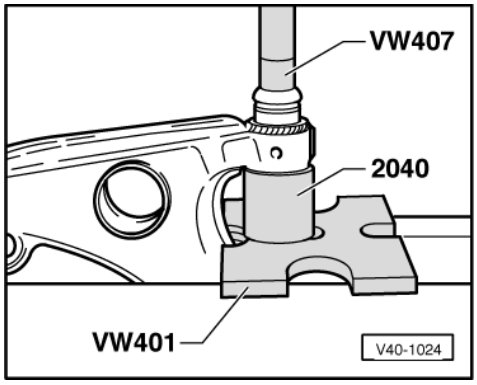

-> Fig.2 Pressing in wishbone front mounting

Note:

Before pressing in coat with acid-free lubricant e.g. soft soap or tyre assembly paste.

- Press in until the shoulders of bush project evenly on both sides.

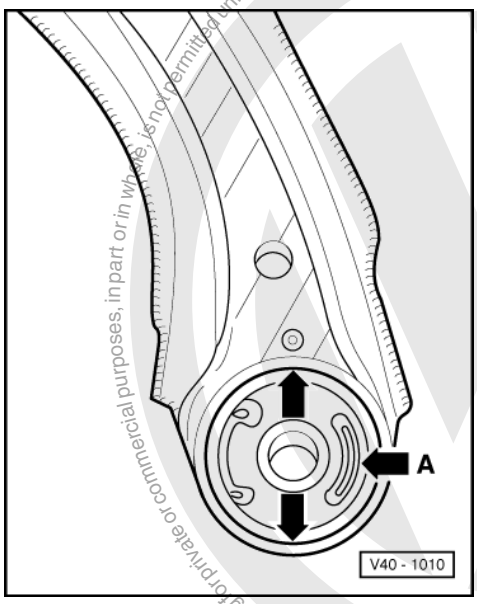

-> Fig.3 Installation position of rear wishbone mounting

One of the embossed arrows points towards the recess in the wishbone and the kidney shaped opening (arrow A) faces towards centre of vehicle.

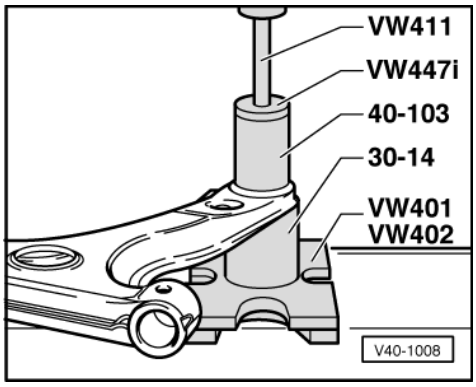

Protected by Copyright. Copying for private or commercial purposes, in part or in whole, is not permitted unless authorised by Volkswagen AG. Volkswagen AG does not guarantee or accept any liability with respect to the correctness of information in this document. Copyright by Volkswagen AG.
satelettronica

-> Fig.4 Pressing rear wishbone mounting out and in

Note:

If bonded rubber bush is tight because of corrosion, cut rubber out, saw through steel casing and drive bush out.

1.8 - Renewing bonded rubber mounting on wishbone 10.99>

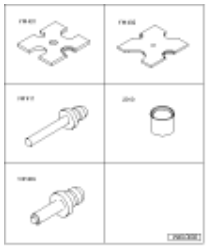

Protected by copyright. Copying for private or commercial purposes, not permitted unless authorised by Volkswagen AG. Volkswagen AG does not guarantee or accept any liability with respect to the correctness of information in this document. Copyright by Volkswagen AG.

Special tools and workshop equipment required

- VW 401 Press plate
- VW 402 Press plate
- VW 411 Press tool
- 2010 Tube
- VW 409 Press tool

satelettronica

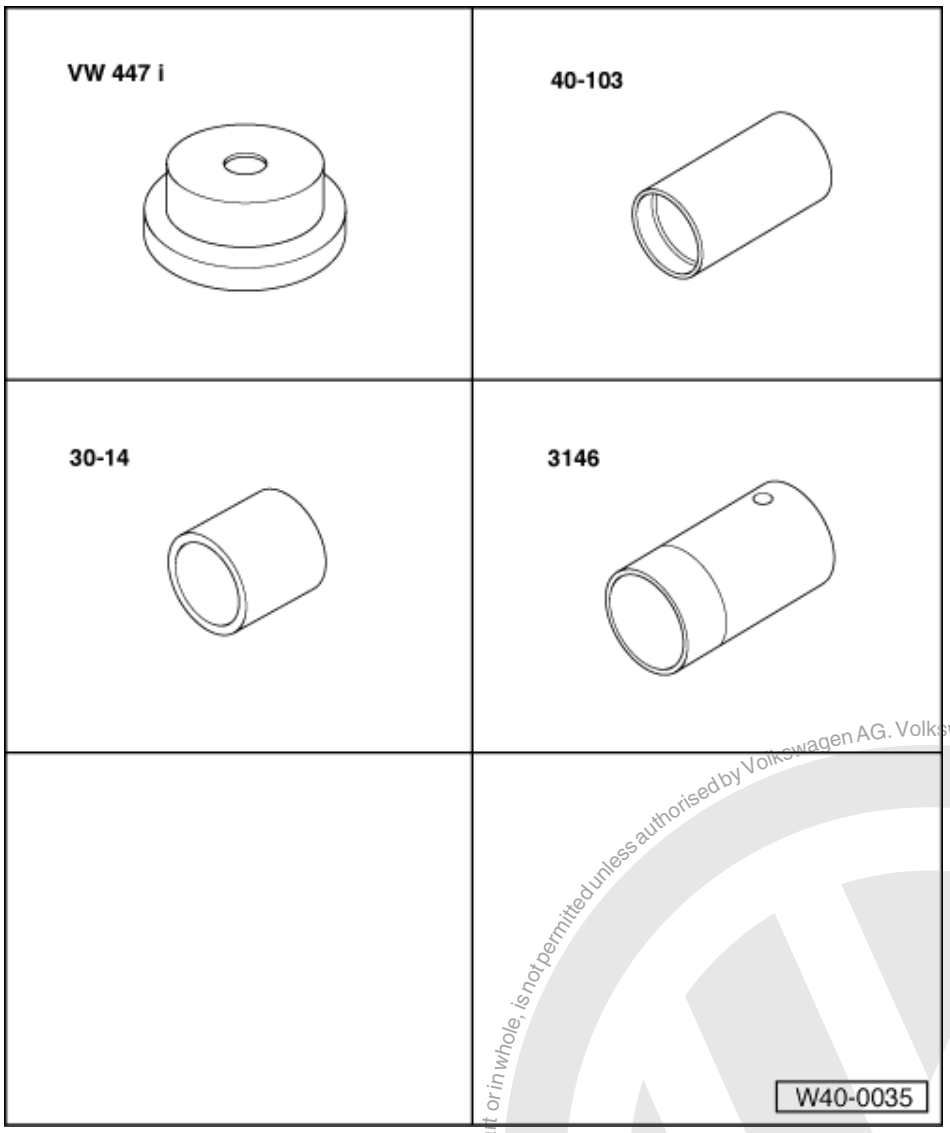

Special tools and workshop equipment required

- VW 447 i Thrust plate
- 40-103 Support
- 30-14 Tube
- 3146 Tube

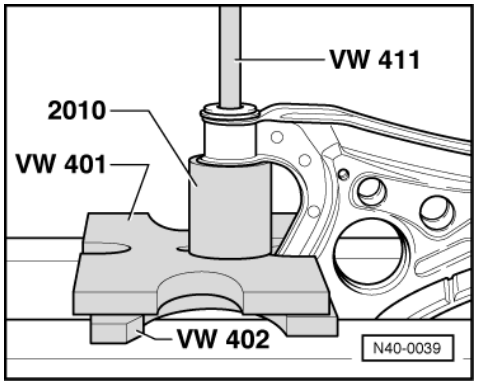

Protected by copyright. Copying for private or commercial purposes, in part or in whole, is not permitted unless authorised by Volkswagen AG. Volkswagen AG does not guarantee or accept any liability with respect to the correctness of information in this document. Copyright by Volkswagen AG.
satelettronica

-> Fig.1 Pressing out front wishbone mounting

The large inner diameter of tube 2010 faces bearing.

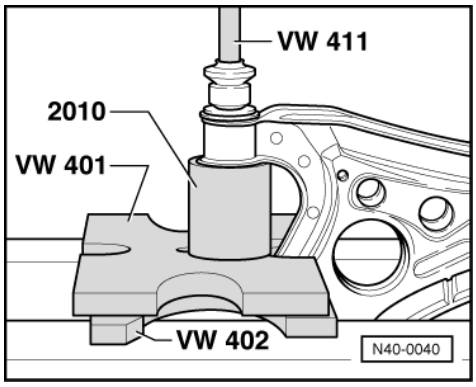

-> Fig.2 Pressing in front wishbone mounting

Note:

Before pressing in coat with acid-free lubricant e.g. soft soap or tyre assembly paste.

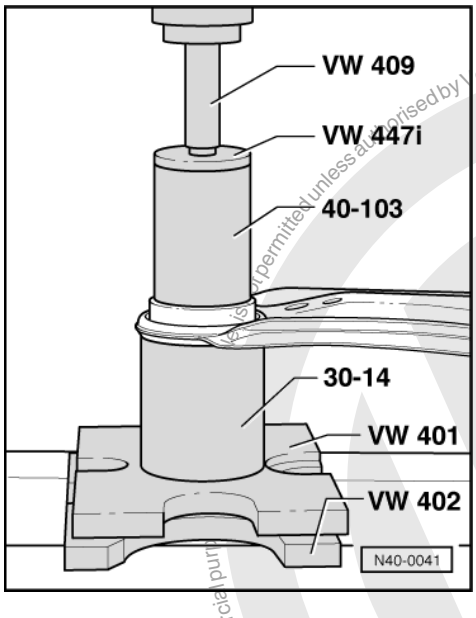

-> Fig.3 Pressing out rear wishbone mounting

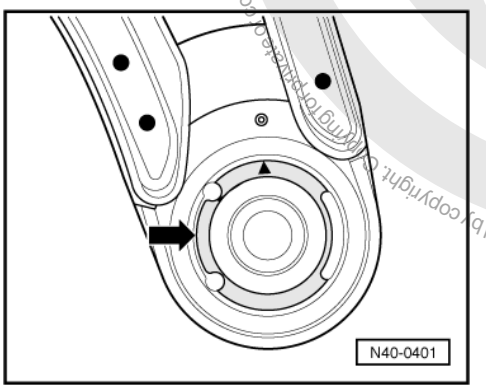

satelettronica
Protected by copyright. Copying for private or commercial purposes, in part or in whole, is not permitted unless authorised by Volkswagen AG. Volkswagen AG does not guarantee or accept any liability with respect to the correctness of information in this document. Copyright by Volkswagen AG.

-> Fig.4 Installation position of rear wishbone mounting

One of the embossed arrows points towards the mark on wishbone.

The section of the mounting -arrow- must always point to outside of vehicle.

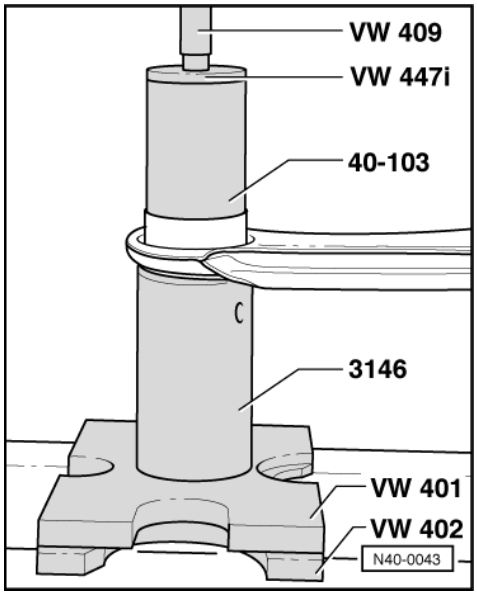

Protected by copyright. Copying for private or commercial purposes, in part or in whole, is not permitted unless authorised by Volkswagen AG. Volkswagen AG does not guarantee or accept any liability with respect to the correctness of information in this document. Copyright by Volkswagen AG.

satelettronica

-> Fig.5 Pressing in rearwishbone mounting

1.9 - Removing and installing subframe

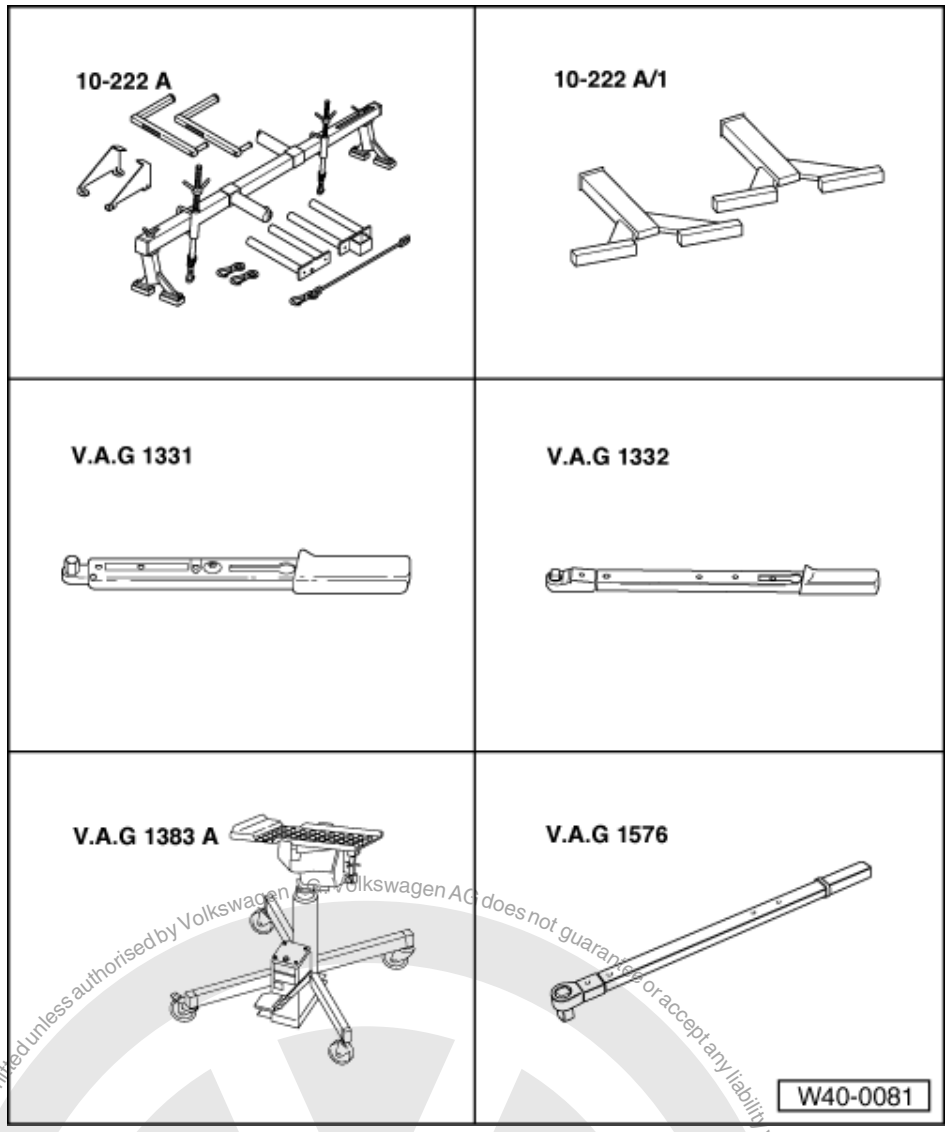

Special tools and workshop equipment required

- 10-222 A Support
- 10-222 A/1 Support
- V.A.G 1331 Torque wrench
- V.A.G 1332 Torque wrench
- V.A.G 1383 A Engine/gearbox jack
- V.A.G 1576 Torque wrench

satelettronica
Protected by copyright. Copying for private or commercial purposes, in part or in whole, is not permitted unless authorised by Volkswagen AG. Copyright by Volkswagen AG. Volkswagen AG does not guarantee or accept any liability with respect to the correctness of information in this document.

Protected by copyright. Copying for private or commercial purposes, in part or in whole, is not permitted unless authorised by Volkswagen AG. Volkswagen AG does not guarantee or accept any liability with respect to the correctness of information in this document. Copyright by Volkswagen AG.

Removing

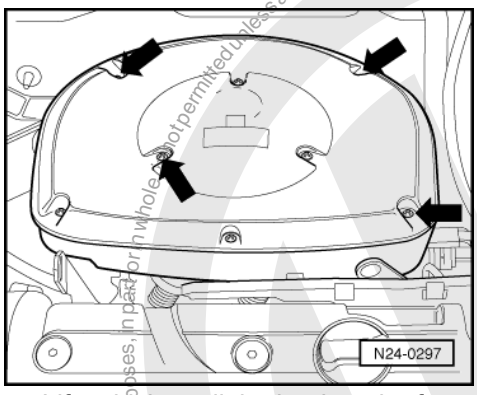

- Lift vehicle until the load on the front axle is relieved.
- Loosen drive shaft hexagon nuts.
- Remove cover from engine, if part of original equipment.
- -> Remove the air cleaner (only on vehicles with oval air cleaner). To do this remove the screws indicated by the arrows.
- Lay the air cleaner to the rear.

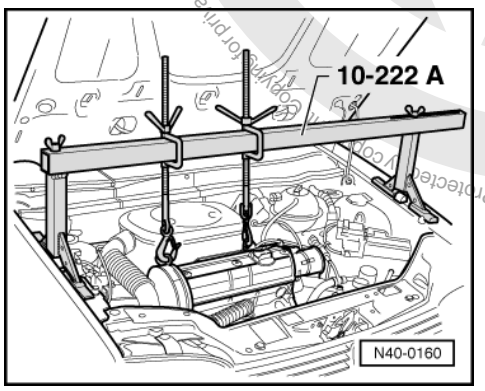

- -> Fit support bar 10-222A together with legs 10-222 A/1.

Note:

Before fitting the support hooks of the support bar, remove hose and wire connections from engine in the area of the lifting eyes, so that they are not damaged.

- Take weight of engine/gearbox assembly on the spindles.

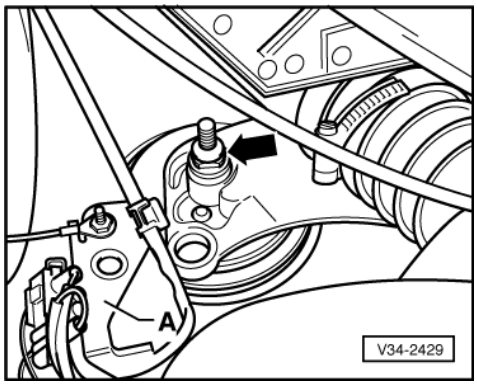

- -> Remove bolt (arrow) on engine console/sub-frame, right. If fitted remove connector mounting plate -A-.

satelettronica

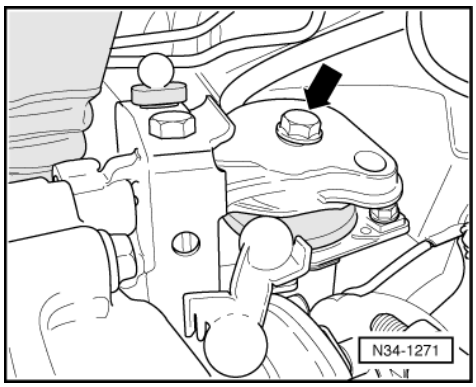

- -> Unbolt hexagon bolt (arrow) on left gearbox assembly mounting.
- Raise vehicle.

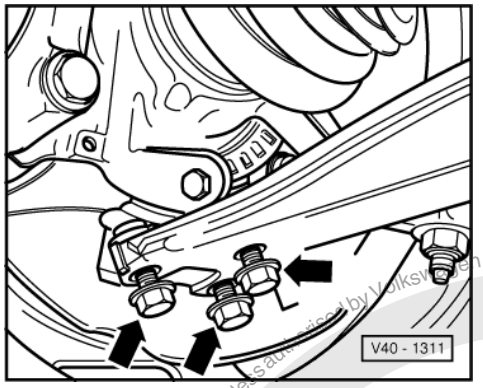

- Mark installation positions of swivel joint bolts on wishbone.
- -> Remove bolts (arrows).

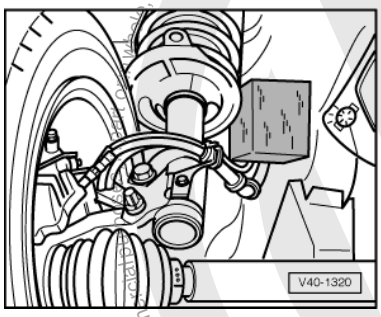

- -> On both sides, swing wheel with suspension struts outwards and support.
- If front exhaust pipe bracket is fitted to sub-frame, remove it.

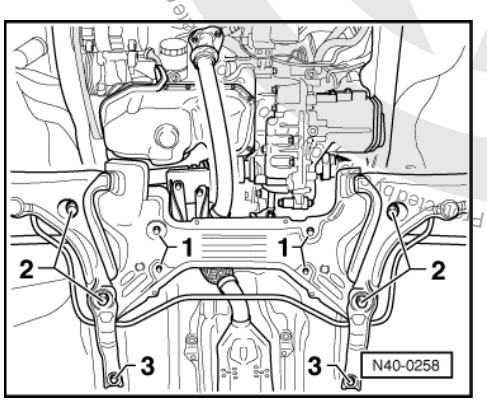

- -> Unbolt steering box from sub-frame -1- and secure, e.g., with wire.
- Unclip power assisted steering feed and pressure pipes from retainer on assembly/gearbox mounting.

satelettronica
Reproduction is not permitted unless authorised by Volkswagen AG. Volkswagen AG does not guarantee or accept any liability with respect to the correctness of information in this document. Copyright by Volkswagen AG.

- Place gearbox jack V.A.G 1383 A under sub-frame.
- Remove bolts -2- and -3- for sub-frame.
- Lower sub-frame using gearbox jack V.A.G 1383 A.
- Ensure that the steering box releases from subframe.

Installing

Install in reverse order.

Before inserting bolts for sub-frame position steering box on sub-frame and insert bolts.

- Install engine/gearbox mounting without tension.

=> Repair group 10; Removing and installing engine Removing and installing engine

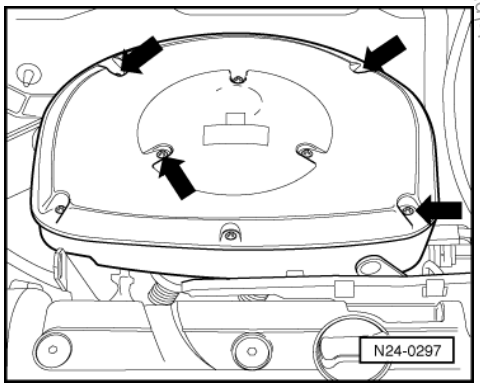

- -> Place housing on carefully and screw in securing screws (arrows) (only on vehicles with oval air cleaner).
- After installing the subframe check steering wheel position and steering alignment.

Tightening torques

Swivel joint to wishbone	35 Nm
Hex nut for drive shaft to wheel hub	265 Nm

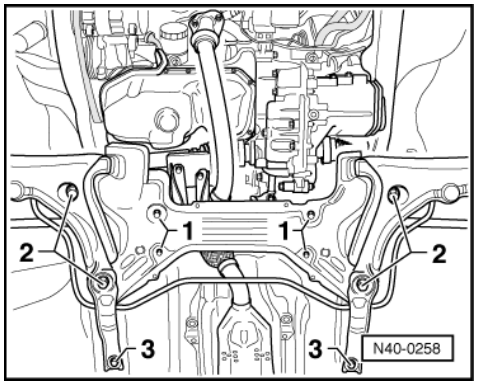

-> Sub-frame to body

1 - 30 Nm
2 - 70 Nm then 90°further
3 - 65 Nm

Protected by copyright. Copying for private or commercial purposes, in part or in whole, is not permitted unless authorised by Volkswagen AG. Volkswagen AG does not guarantee or accept any liability with respect to the correctness of information in this document. Copyright by Volkswagen AG.
satelettronica

1.10 - Reworking cap nut in side member

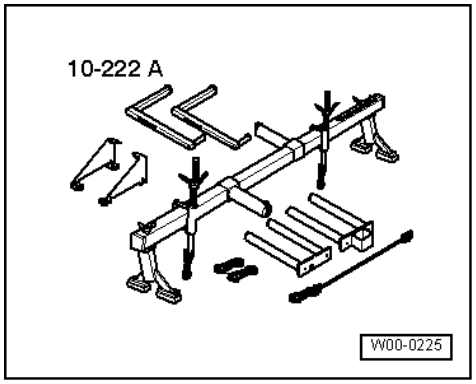

Special tools and workshop equipment required

- 10-222 A Engine support bracket

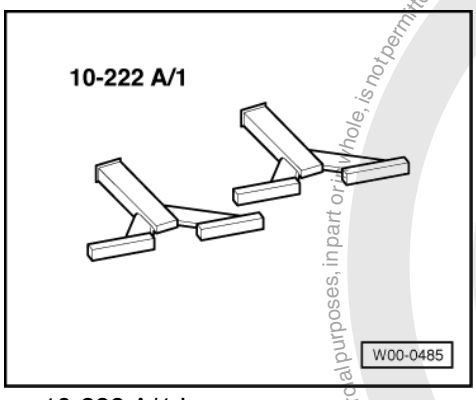

- 10-222 A/1 Legs

If the threads of the cap nut in the side member are damaged, the thread must either be retapped or the cap nut must be drilled out.

When drilling out proceed as follows:

- Support engine/gearbox assembly with engine support bracket 10-222 A and legs 10-222 A/1.
- Remove the sub-frame => Page 23 .
- Drill out the damaged side member cap nut with a 10.2 mm ø drill from underneath.

When drilling do not cant the drill.

Warning! Wear protective goggles.

- Cut new M 12 x 1.5 thread in cap nut.
- Use a new combi bolt to secure sub-frame => Page 27 .

Combi bolts for sub-frame

Securing point	Thread	Bolt	Part No.
Front sub-frame	M12 x 1.5	M12 x 1.5 x 95 10.9	N 101 612.011)
Rear sub-frame	M12 x 1.5	M12 x 1.5 x 95 10.9	N 101 612.01
Sub-frame bracket	M10	M10 x 38 10.9	N 019 541.1

Protected by copyright. Copying for private or commercial purposes, in part or whole, is not permitted unless authorised by Volkswagen AG. Volkswagen AG does not guarantee or accept any liability with respect to the correctness of information in this document. Copyright by Volkswagen AG.
satelettronica

Securing point	Thread	Bolt	Part No.
Engine front cross member to side member	M10	M10 x 75 10.9	N 904 078.011)

1) These bolts are not listed on the parts microfiche. They must be specially ordered.

Tightening torque remains unchanged.

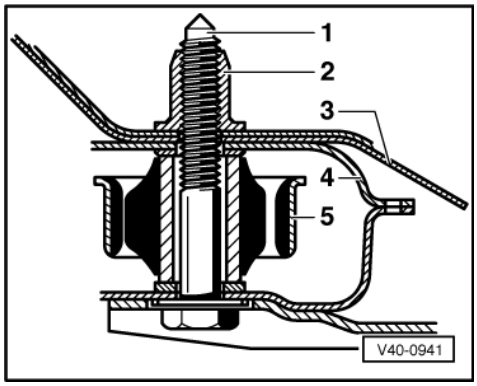

-> 1 - Combi bolt

2 - Cap nut

3 - Side member

4 - Sub-frame

5 - Bonded rubber mounting/wishbone

Protected by copyright. Copying for private or commercial purposes, in part or in whole, is not permitted unless authorised by Volkswagen AG. Volkswagen AG does not guarantee or accept any liability with respect to the correctness of information in this document. Copyright by Volkswagen AG.
satelettronica

1.11 - II - Servicing wheel bearing

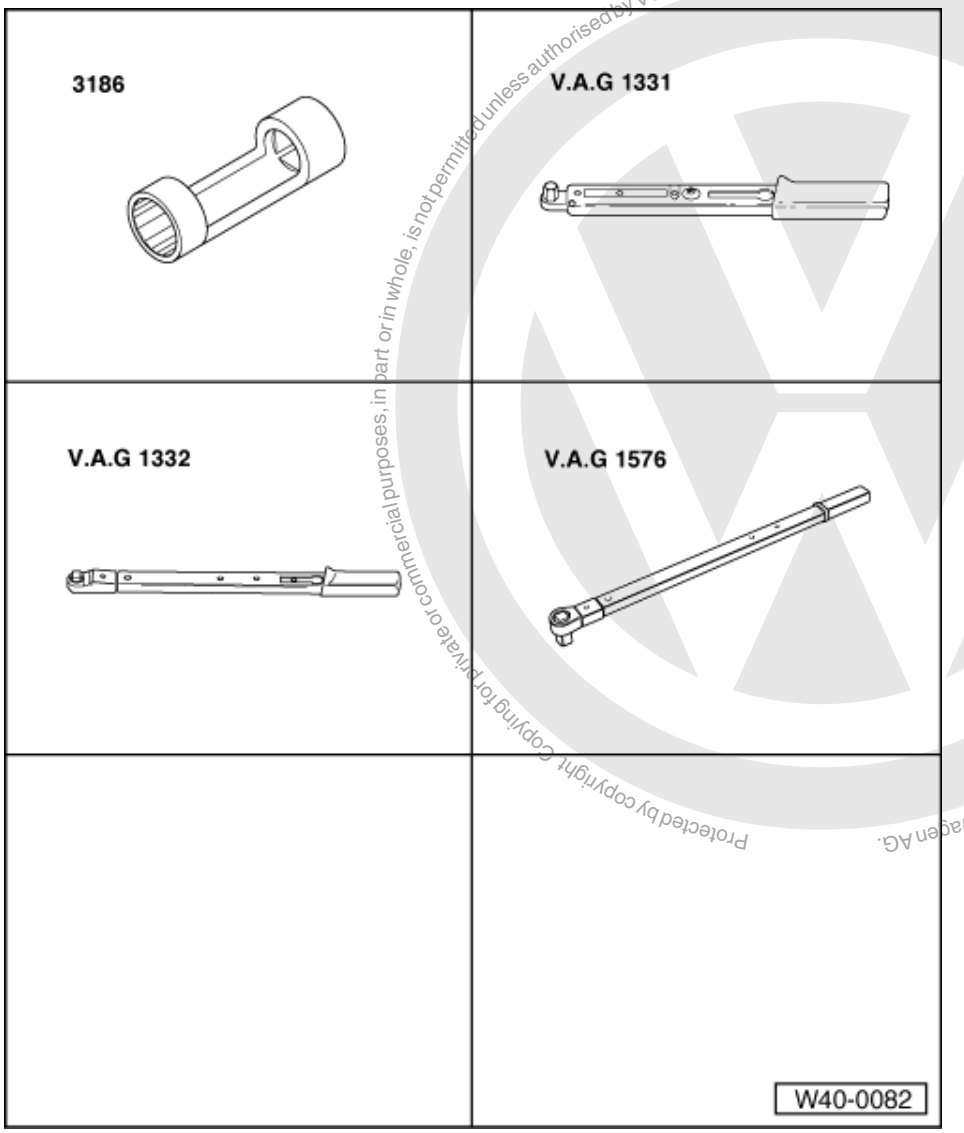

Protected by copyright. Copying for private or commercial purposes, in part or in whole, is not permitted unless authorised by Volkswagen AG. Volkswagen AG does not guarantee or accept any liability with respect to the correctness of information in this document. Copyright by Volkswagen AG.

satelettronica

Special tools and workshop equipment required

- 3186 Socket insert 21 mm AF
- V.A.G 1331 Torque wrench
- V.A.G 1332 Torque wrench
- V.A.G 1576 Torque wrench

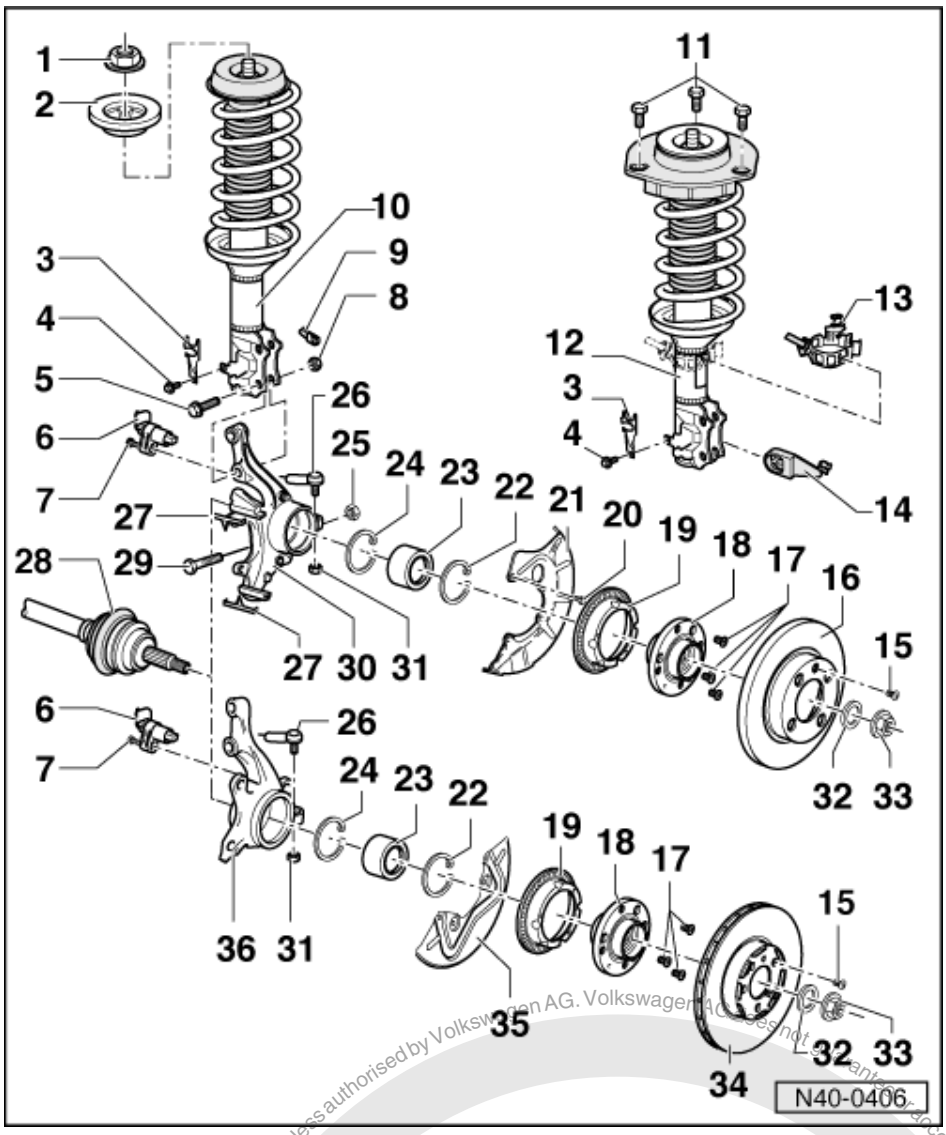

Notes:

- If a vehicle has to be moved after removing the drive shaft, first install outer joint and tighten to 50 Nm otherwise the wheel bearing will be damaged.
- It is not permitted to carry out welding and straightening operations on load bearing suspension components or those components which locate the wheels.
- Always renew self-locking nuts.
- Always renew corroded nuts/bolts.
- Wheel bolt tightening torque: 110 Nm.

1 Self-locking nut, 60 Nm

- Loosening and tightening
  => Fig. 1

Protected by copyright. Copying for private or commercial purposes, in part or in whole, is not permitted unless authorised by Volkswagen AG. Volkswagen AG does not guarantee or accept any liability with respect to the correctness of information in this document. Copyright by Volkswagen AG.
satelettronica

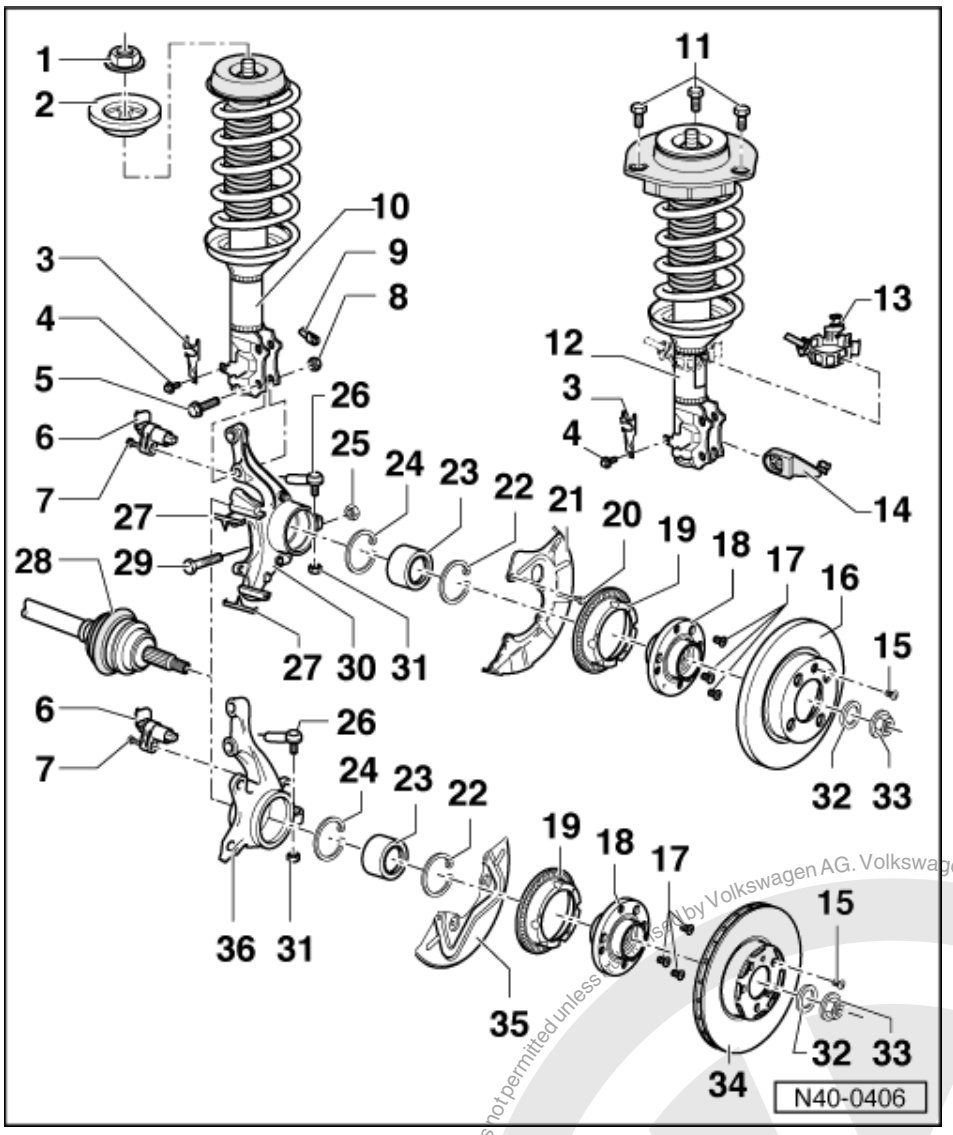

2 Stop
3 Bracket
4 Hexagon bolt
5 Bolt
- Adjusting camber => Page 164
- Mark position before loosening

6 Speed sensor
7 Hexagon socket head bolt, 10 Nm
8 Self-locking nut, 95 Nm
9 Bracket
- Only on vehicles with ABS

10 Suspension strut
- Only Caddy, Polo Classic, Polo Estate ▸09.99
- Allocation

=> Replacement parts catalogue

- Servicing => Page 48

Protected by copyright. Copying for private or commercial purposes, in part or in whole, is not permitted unless authorised by Volkswagen AG. Volkswagen AG does not guarantee or accept any liability with respect to the correctness of information in this document. Copyright by Volkswagen AG.
satelettronica

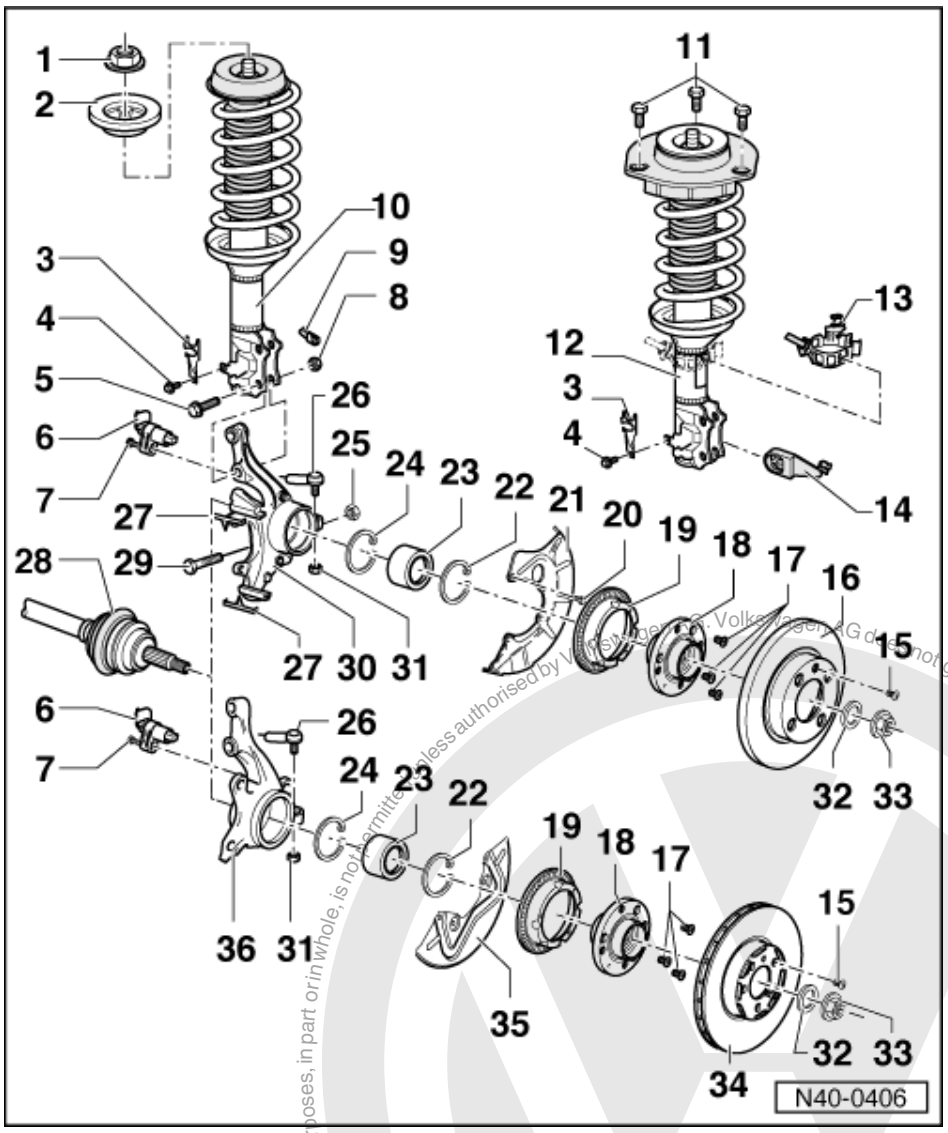

11 Hexagon head bolt

- 15 Nm and turn 180° further
- Renew each time after removing

12 Suspension strut

- Only Polo Classic, Polo Estate 10.99 ▸
- Allocation

=> Replacement parts catalogue

- Servicing => Page 52

13 Bracket

- Only Polo Classic, Polo Estate 10.99 ▸
- Allocation

=> Replacement parts catalogue

14 Bracket

- Only Polo Classic, Polo Estate 10.99 ▸
- Allocation

=> Replacement parts catalogue

Protected by copyright. Copying for private or commercial purposes, in part or in whole, is not permitted unless authorised by Volkswagen AG. Volkswagen AG does not guarantee or accept any liability with respect to the correctness of information in this document. Copyright by Volkswagen AG.
satelettronica

15 Cross-head screw

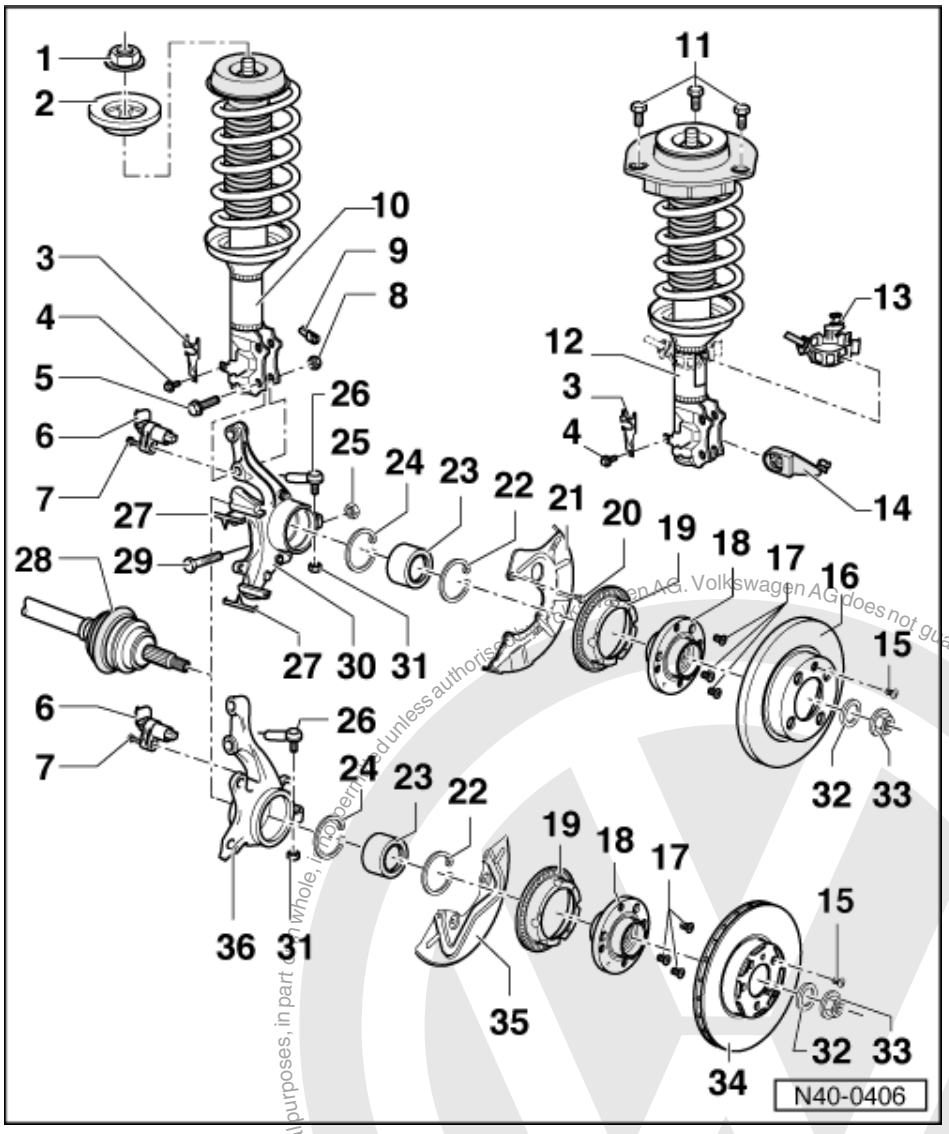

16 Brake disc
- For vehicles through vehicle No. 6K 022 628

17 Cross-head screw

18 Hub
- Removing and installing when the wheel bearing housing is installed, 13" wheels => Page 38
- Removing and installing when the wheel bearing housing is installed, 14" wheels => Page 43

19 Speed sensor rotor
- Only on vehicles with ABS

20 Hexagon bolt, 10 Nm

21 Splash plate
- For VW II brake caliper

22 Circlip
- Ensure correctly seated

Protected by copyright. Copyright by Volkswagen AG.
Copyright by Volkswagen AG. Volkswagen AG does not guarantee or accept any liability with respect to the correctness of information in this document.
Whole, in part or in any other form or for commercial purposes, in part or in whole, is prohibited unless authorised by Volkswagen AG.
satelettronica

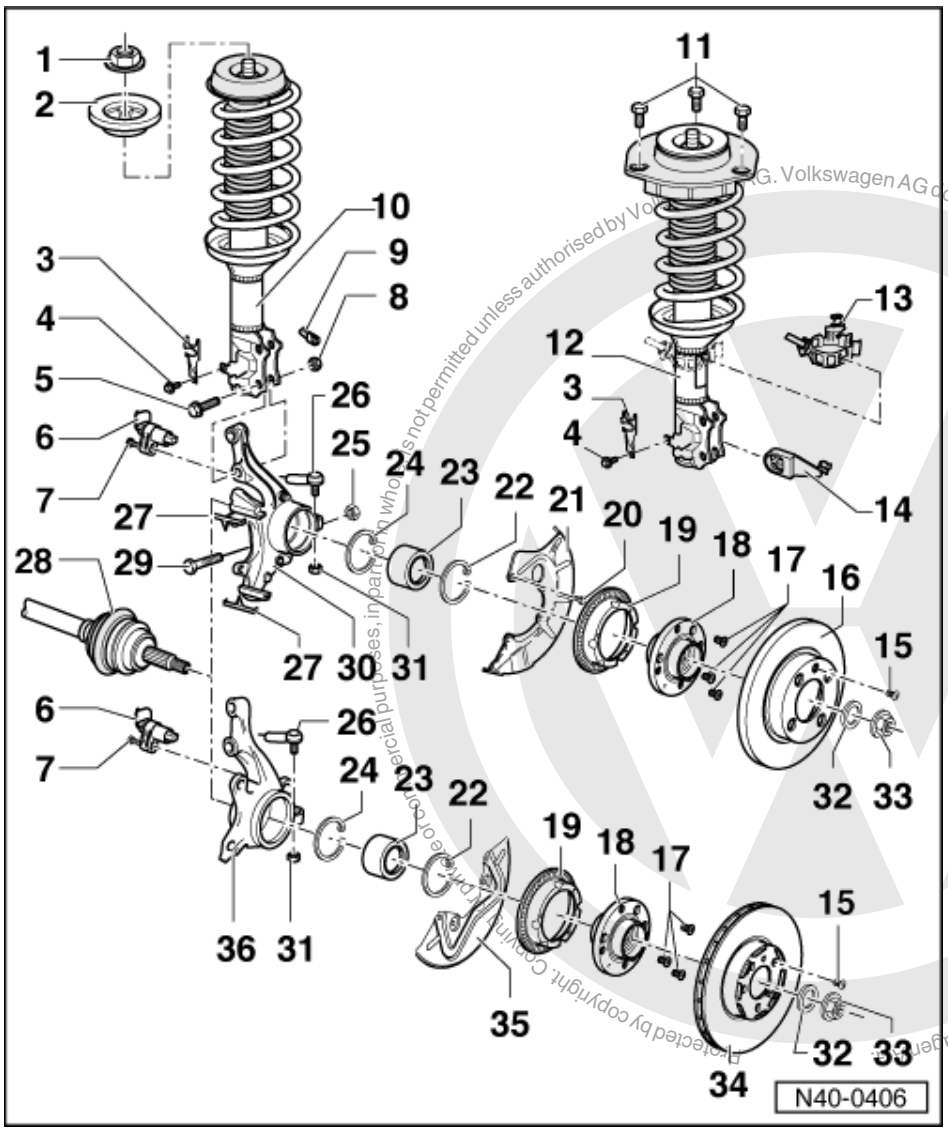

23 Wheel bearing

- Removing and installing when the wheel bearing housing is installed, 13" wheels => Page 38
- Removing and installing when the wheel bearing housing is installed, 14" wheels => Page 43

24 Circlip

- Ensure correctly seated

25 Self-locking hexagon nut, 50 Nm

26 Track rod

- Removing and installing
  => Page 210

27 Brake pad retaining spring

- For VW II brake caliper through vehicle No. V 022 628

28 Drive shaft

- Removing and installing => Page 56
- Repairing => Page 56

satelettronica

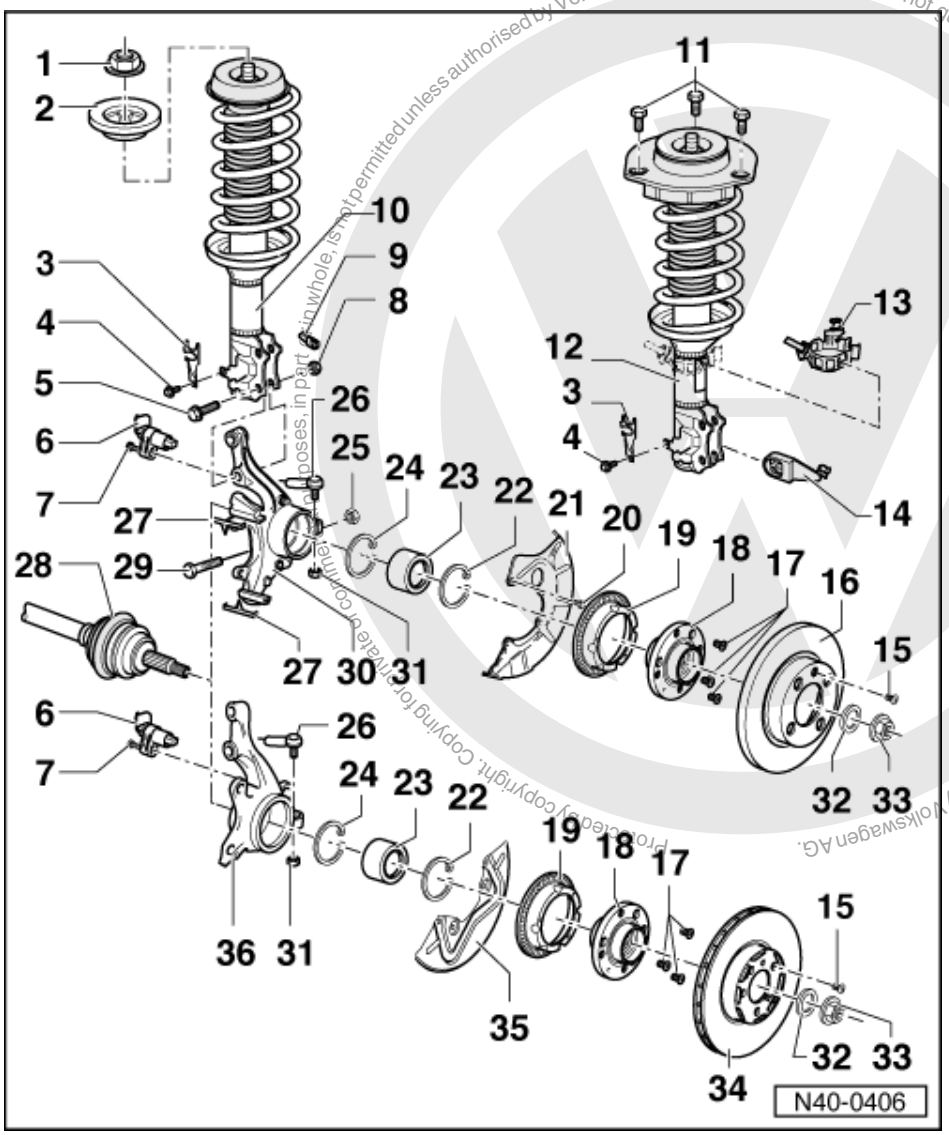

29 Hexagon bolt

- Clamping bolt for ball joint

30 Wheel bearing housing

- For VW II brake caliper

31 Self-locking hexagon nut, 35 Nm

32 Washer

33 Self-locking hexagon nut, 265 Nm

- Only loosen and tighten with the vehicle standing on its wheels (danger of accident)
- Any paint residue and/or corrosion on the thread of the outer joint must be removed before the nut is fitted
- Renew each time after removing

satelettronica

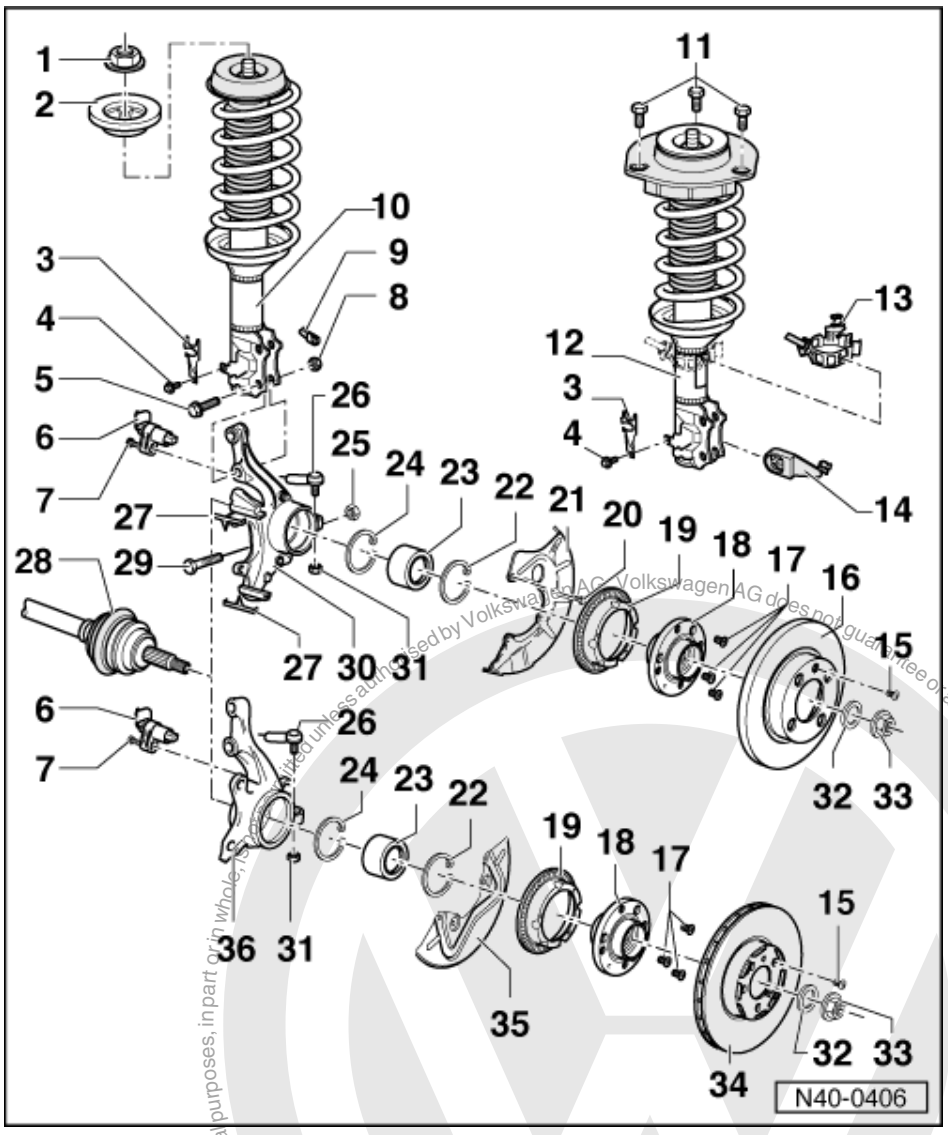

34 Brake disc

- For vehicles from vehicle No. 6K V 022 629
- ø239.00 mm for VW II brake caliper
- ø256.00 mm for Lucas Co. brake caliper

35 Splash plate

- For Lucas Co. brake caliper

36 Wheel bearing housing

- For Lucas Co. brake caliper

Protected by copyright. Copying for private or commercial purposes, in part or in whole, is not permitted unless authorised by Volkswagen AG. Volkswagen AG does not guarantee or accept any liability with respect to the correctness of information in this document. Copyright by Volkswagen AG.
satelettronica

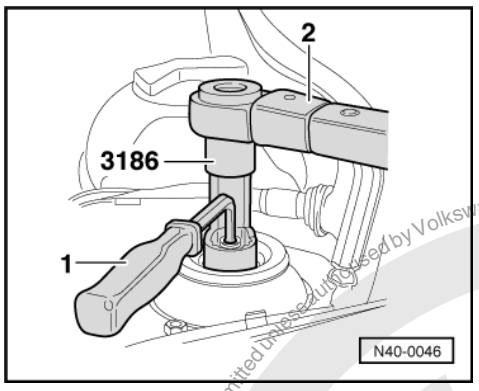

-> Fig.1 Removing and installing suspension strut to body

1 - Hexagon key (7 m AF)
2 - V.A.G 1332

Note:

The suspension strut can also be removed and installed with shock absorber fitting tool T10001.

Protected by copyright. Copying for private or commercial purposes, in part or in whole, is not permitted unless authorised by Volkswagen AG. Volkswagen AG does not guarantee or accept any liability with respect to the correctness of information in this document. Copyright by Volkswagen AG.

satelettronica

1.12 - Pressing front wheel bearing out and in with wheel bearing housing installed, 13" wheels

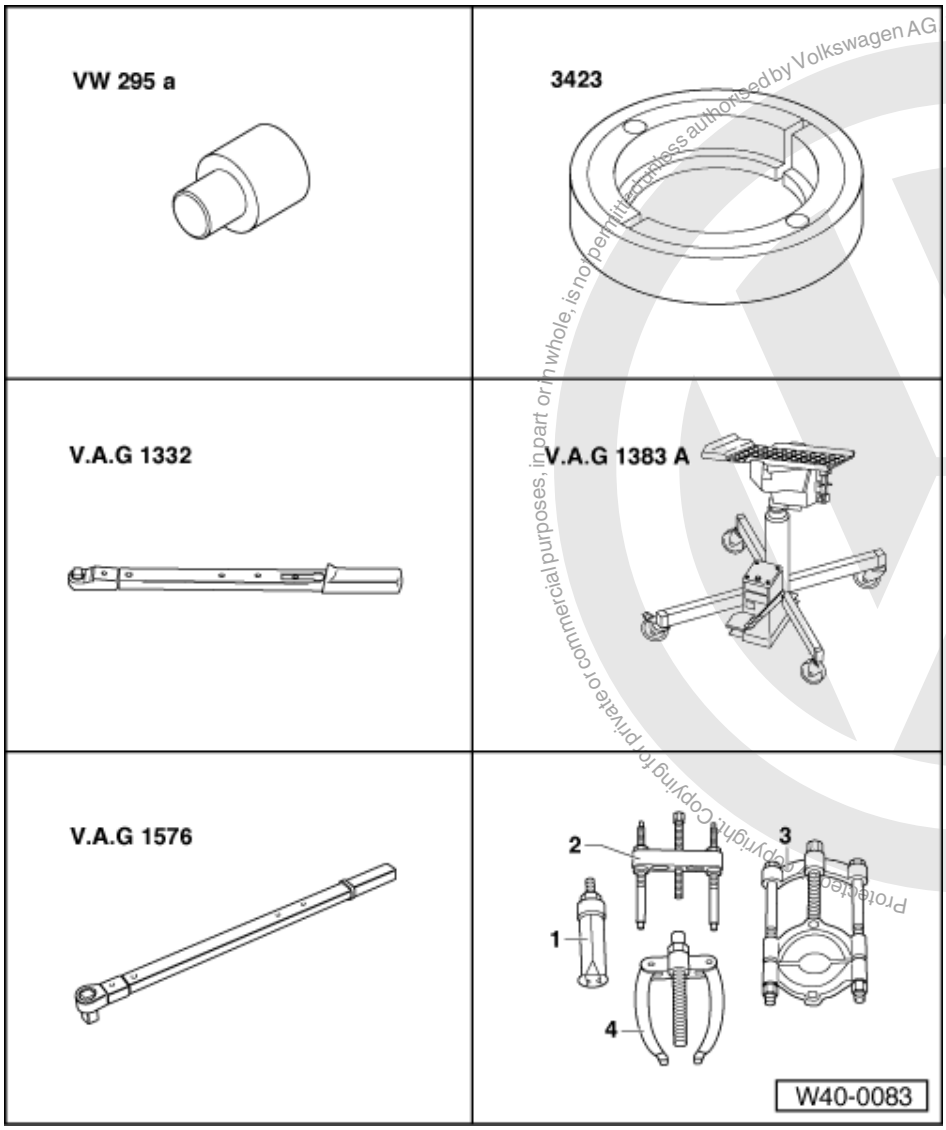

Volkswagen AG does not guarantee or accept any liability with respect to the correctness of information in this document. Copyright by Volkswagen AG.
Protected by copyright. Copying for private or commercial purposes, in part or in whole, is not permitted unless authorised by Volkswagen AG.
satelettronica

Special tools and workshop equipment required

- VW 295a Adapter
- 3423 Puller
- V.A.G 1332 Torque wrench
- V.A.G 1383 A Engine/gearbox jack with universal gearbox mounting V.A.G 1359/2
- V.A.G 1576 Torque wrench
- 2 - Kukko 18/0 Puller

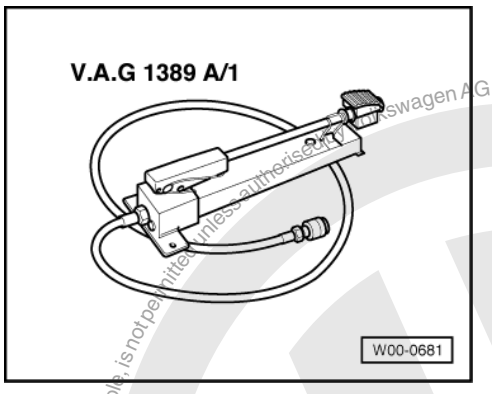

Special tools and workshop equipment required

- V.A.G 1389 A/1 Foot pump with high pressure hose

If there is a hand pump V.A.G 1389/1 available in the dealership it can be converted to a foot pump.

To do this use the conversion set V.A.G 1389/3.

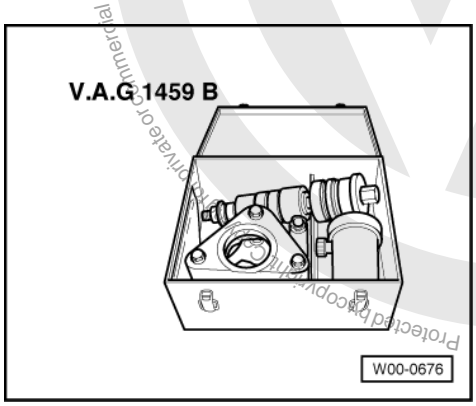

- V.A.G 1459 B Hydraulic removal and fitting tool for wheel bearing
  - Hollow-piston cylinder HKZ-15 with hydraulic press piece E-0-204-T
  - Pull rods E-0-217+218
  - Special nut E-8-214
  - Thrust piece E-10
  - Thrust piece E-13-1
  - Thrust piece E-18
  - Thrust sleeve E-65-1

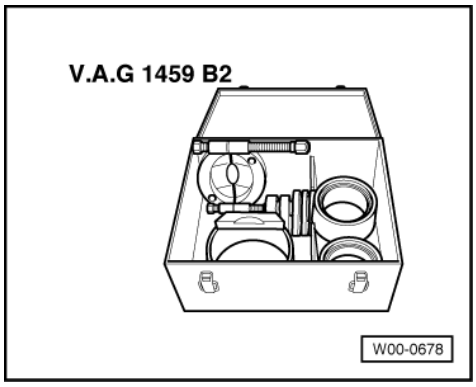

- V.A.G 1459 B/2 Supplementary set
  - Bell E-40
- VAS 5239 Thrust pad with sleeve

Protected by copyright. Copyright by Volkswagen AG. Volkswagen AG does not guarantee or accept any liability with respect to the correctness of information in this document. Copyright by Volkswagen AG. Reproduction, in part or in whole, is not permitted unless authorised for private or commercial purposes.
satelettronica

Removing

- Lift vehicle until the load on the front axle is relieved.
- Loosen drive shaft hexagon nut.
- Lift the vehicle to fitting height.
- Remove wheel.
- Unbolt and remove both guide pins from brake caliper.

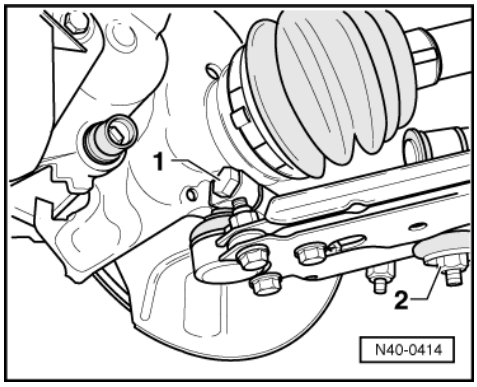

- Take off brake caliper housing and secure with wire so that the weight of the brake caliper does not stress or damage the brake hose.
- Remove cross-head screw for brake disc and take off brake disc.
- -> Remove bolt -1-.
- Pull wishbone together with swivel joint out of wheel bearing housing.

- Remove drive shaft from wheel bearing housing and tie up.

  The drive shaft must not hang down!

The inner joint will otherwise be damaged through overflexing.

- Remove speed sensor.

Pulling out hub

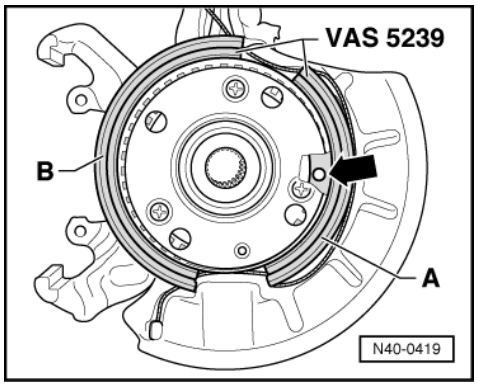

- -> Fit thrust pad from VAS 5239 as shown in figure.
  Position -A- half of thrust pad so that it lies with drilling -arrow- completely on the bolt head behind rotor.
  Position -B- half of thrust pad so that it lies with notches completely on bolt heads behind rotor.

Note:

Place gearbox jack V.A.G 1383/A underneath (danger of accident from falling parts when pulling out the wheel hub and the wheel bearing).

Protected by copyright. Copying for private or commercial purposes, in part or in whole, is not permitted unless authorised by Volkswagen AG. Volkswagen AG does not guarantee or accept any liability with respect to the correctness of information in this document. Copyright by Volkswagen AG.
satelettronica

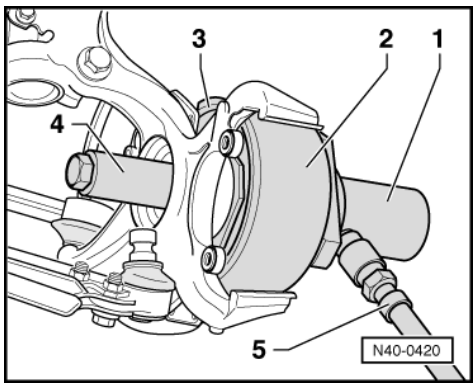

- Fit hollow-piston cylinder -1-, bell -2-, thrust pad -3- with pull rod and special nut -4-.
- Pull out the wheel bearing by operating pump.

1 - Hollow-piston cylinder HKZ-15
2 - Bell E-40
3 - Thrust pad VAS 5239
4 - Special nut E-8-214 and pull rod
5 - High pressure hose with quick release coupling

Pulling out wheel bearing

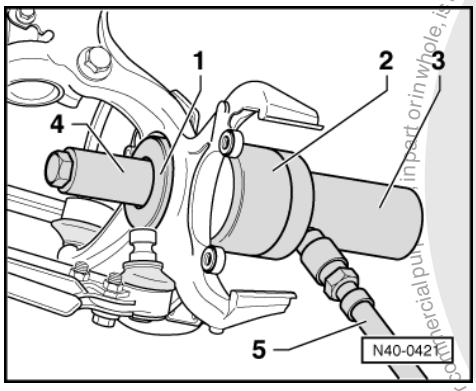

- Remove inner and outer circlips.
- -> Set up thrust piece -1- with collar facing wheel bearing, sleeve -2-, hollow-piston cylinder -3- with pull rod and special nut -4-.
- Pull out the wheel bearing by operating pump.

1 - Thrust piece E-3
2 - Sleeve from VAS 5239
3 - Hollow-piston cylinder HKZ-15
4 - Special nut E-8-214 and pull rod
5 - High pressure hose with quick release coupling

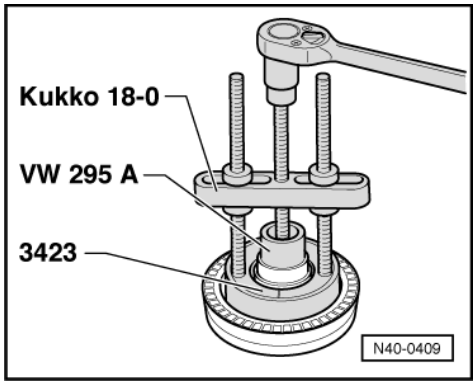

Protected by copyright. Copyright by Volkswagen AG.
Volkswagen AG does not guarantee or accept any liability with respect to the correctness of information in this document. Copyright by Volkswagen AG. Volkswagen AG. In part or in whole, it is not permitted unless authorised by Volkswagen AG.
satelettronica

-> Pulling inner race off hub

Pressing in wheel bearing

- Grease drilling surfaces in wheel bearing housing completely with Molykote grease, Part No. N052 723 00.

Use grease sachet from repair set.

- Insert inner circlip with long-nose pliers.

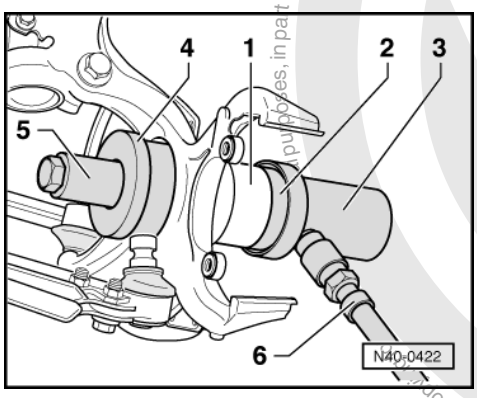

- -> Fit wheel bearing -1-, press piece -2- (fit with collar in bearing) and hollow-piston cylinder -3- with pull rod on wheel bearing housing.
- Fit thrust piece -4- and special nut -5- from inside.
- Press wheel bearing in by operating the pump.
- Insert outer circlip with long-nose pliers.

1 - Wheel bearing
2 - Thrust piece E-13-1
3 - Hollow-piston cylinder HKZ-15
4 - Thrust piece E-10
5 - Special nut E-8-214 and pull rod
6 - High pressure hose with quick release coupling

Pressing in wheel hub

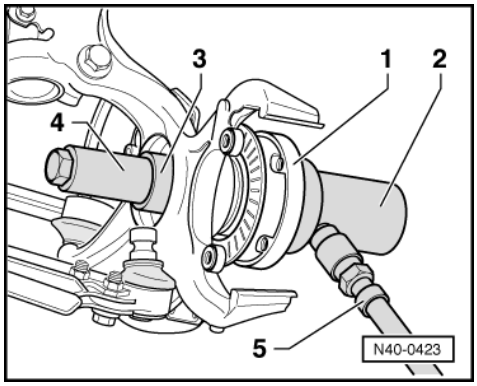

- -> Fit hub -1- and hollow-piston cylinder -2- with pull rod on wheel bearing.
- Fit special nut -4- and thrust piece -3- (with collar towards special nut) on the inside.
- Press in hub by operating the pump.

1 - Hub
2 - Hollow-piston cylinder HKZ-15
3 - Thrust piece E-18
4 - Special nut E-8-214 and pull rod
5 - High pressure hose with quick release coupling

Further assembly work is carried out in the reverse order.

Protected copyright. Copyright by Volkswagen AG. Volkswagen AG does not guarantee or accept any liability with respect to the correctness of information in this document. Copyright by Volkswagen AG. Not to be reproduced, in part or whole, is not permitted unless authorised by Volkswagen AG.
satelettronica

Tightening torques

Swivel joint to wheel bearing housing	50 Nm
Hex nut for drive shaft to wheel hub	265 Nm

1.13 - Pressing front wheel bearing out and in with wheel bearing housing installed, 14" wheels

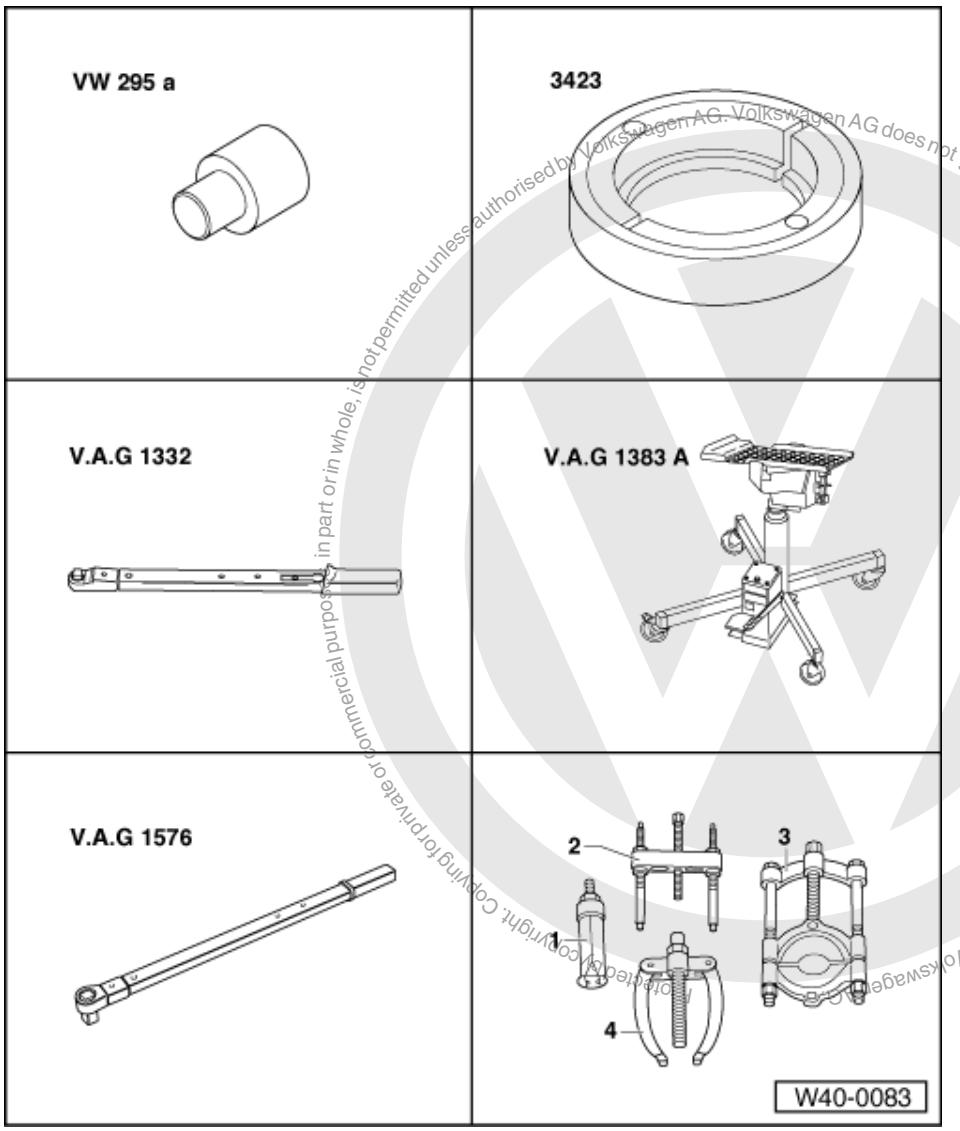

Volkswagen AG. Volkswagen AG does not guarantee or accept any liability with respect to the correctness of information in this document. Copyright by Volkswagen AG. Copying for private or commercial purposes, in part or in whole, is not permitted unless authorised by Volkswagen AG. Copyright. Copying for private or commercial purposes, in part or in whole, is not permitted unless authorised by Volkswagen AG.

satelettronica

Special tools and workshop equipment required

- VW 295a Adapter
- 3423 Puller
- V.A.G 1332 Torque wrench
- V.A.G 1383 A Engine/gearbox jack with universal gearbox mounting V.A.G 1359/2
- V.A.G 1576 Torque wrench
- 2 - Kukko 18/0 Puller

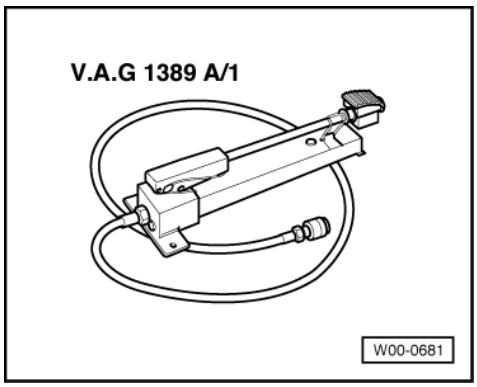

Special tools and workshop equipment required

- V.A.G 1389 A/1 Foot pump with high pressure hose

If there is a hand pump V.A.G 1389/1 available in the dealership it can be converted to a foot pump.

To do this use the conversion set V.A.G 1389/3.

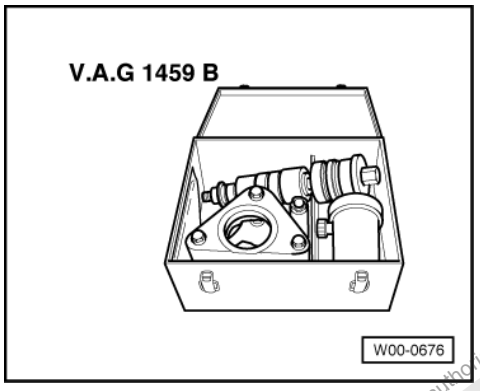

- V.A.G 1459 B Hydraulic removal and fitting tool for wheel bearing
  - Hollow-piston cylinder HKZ-15 with hydraulic press piece E-0-204-T
  - Pull rods E-0-217+218
  - Special nut E-8-214
  - Thrust piece E-10
  - Thrust piece E-13-1
  - Thrust piece E-18
  - Thrust sleeve E-65-1

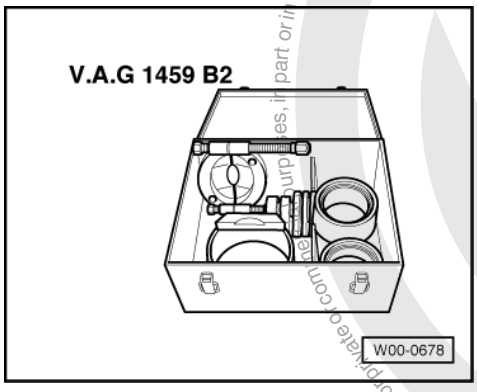

- V.A.G 1459 B/2 Supplementary set
  - Bell E-40
- VAS 5239 Thrust pad with sleeve

Protected by copyright. Copying for private or commercial purposes, in part or in whole, is not permitted unless authorised by Volkswagen AG. Volkswagen AG does not guarantee or accept any liability with respect to the correctness of information in this document. Copyright by Volkswagen AG.
satelettronica

Removing

- Lift vehicle until the load on the front axle is relieved.
- Loosen drive shaft hexagon nut.
- Lift the vehicle to fitting height.
- Remove wheel.

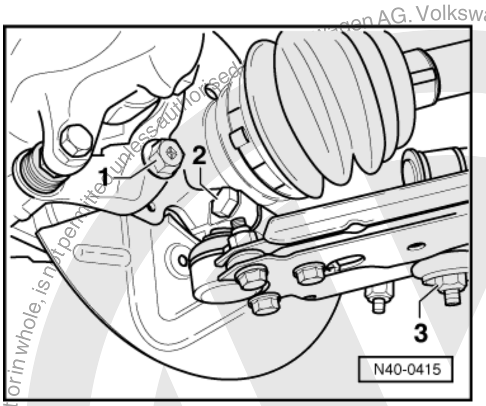

- Remove bolts for brake caliper mounting -1-.
- Secure brake caliper to body with wire.
- Remove cross-head screw for brake disc and take off brake disc.
- Remove bolts -2- from wheel bearing housing.
- Pull wishbone together with swivel joint out of wheel bearing housing.

- Remove drive shaft from wheel bearing housing and tie up.

  The drive shaft must not hang down!

The inner joint will otherwise be damaged through overflexing.

- Remove cover plate.
- Remove speed sensor.

Pulling out hub

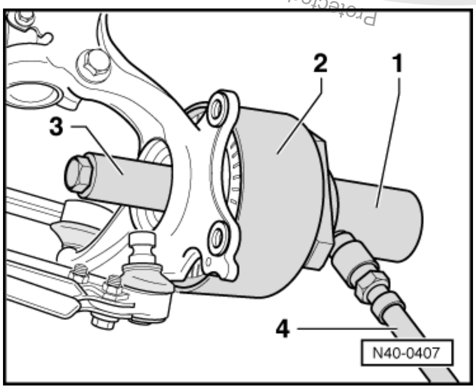

Note:

Place gearbox jack V.A.G 1383/A underneath (danger of accident from falling parts when pulling out the wheel hub and the wheel bearing).

- Set up hollow-piston cylinder -1-, bell -2-, with pull rod and special nut -3-.
- Pull out the wheel bearing by operating pump.

  1 - Hollow-piston cylinder HKZ-15
    2 - Bell E-40
    4 - Special nut E-8-214 and pull rod

Protected by copyright. Copying for private or commercial purposes, in part or in whole, is not permitted unless authorised by Volkswagen AG. Volkswagen AG does not guarantee or accept any liability with respect to the correctness of information in this document. Copyright by Volkswagen AG.
sateletronica

5 - High pressure hose with quick release coupling

Pulling out wheel bearing

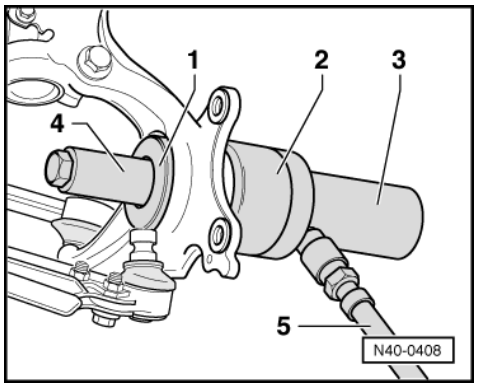

- Remove inner and outer circlips.
- -> Set up thrust piece -1- with collar facing wheel bearing, sleeve -2-, hollow-piston cylinder -3- with pull rod and special nut -4-.
- Operate pump and pull out the wheel bearing.

1 - Thrust piece E-3
2 - Sleeve from VAS 5239
3 - Hollow-piston cylinder HKZ-15
4 - Special nut E-8-214 and pull rod
5 - High pressure hose with quick release coupling

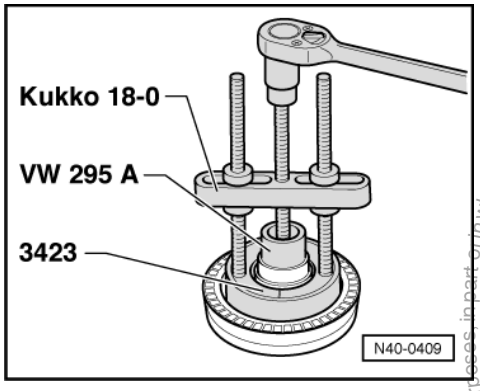

-> Pulling inner race off hub

Pressing in wheel bearing

- Grease drilling surfaces in wheel bearing housing completely with Molykote grease, Part No. N052 723 00.

Use grease sachet from repair set.

- Insert inner circlip with long-nose pliers.

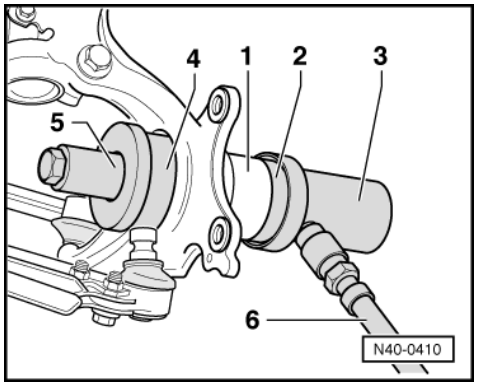

Protected by copyright. Copying for private or commercial purposes, in part or in whole, is not permitted unless authorised by Volkswagen AG. Volkswagen AG does not guarantee or accept any liability with respect to the correctness of information in this document. Copyright by Volkswagen AG.
satelettronica

- -> Fit wheel bearing -1-, press piece -2- (fit with collar in bearing) and hollow-piston cylinder -3- with pull rod on wheel bearing housing.
- Fit thrust piece -4- and special nut -5- from inside.
- Press wheel bearing in by operating the pump.
- Insert outer circlip with long-nose pliers.

1 - Wheel bearing
2 - Thrust piece E-13-1
3 - Hollow-piston cylinder HKZ-15
4 - Thrust piece E-10
5 - Special nut E-8-214 and pull rod
6 - High pressure hose with quick release coupling

Pressing in wheel hub

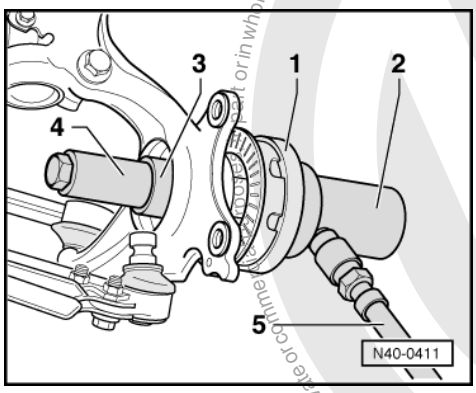

- -> Fit hub -1- and hollow-piston cylinder -2- with pull rod on wheel bearing.
- Fit special nut -4- and thrust piece -3- (with collar towards special nut) on the inside.
- Press in hub by operating the pump.

1 - Hub
2 - Hollow-piston cylinder HKZ-15
3 - Thrust piece E-18
4 - Special nut E-8-214 and pull rod
5 - High pressure hose with quick release coupling

Further assembly work is carried out in the reverse order.

Tightening torques

Swivel joint to wheel bearing housing	50 Nm
Hex nut for drive shaft to wheel hub	265 Nm
Combi-bolt to brake caliper mounting	125 Nm

Protected by copyright. Copying for private or commercial purposes, in part or in whole, is not permitted unless authorised by Volkswagen AG. Volkswagen AG does not guarantee or accept any liability with respect to the correctness of information in this document. Copyright by Volkswagen AG.
satelettronica

1.14 - III - Servicing front suspension strut, Caddy, Polo Classic, Polo Estate > 09.99

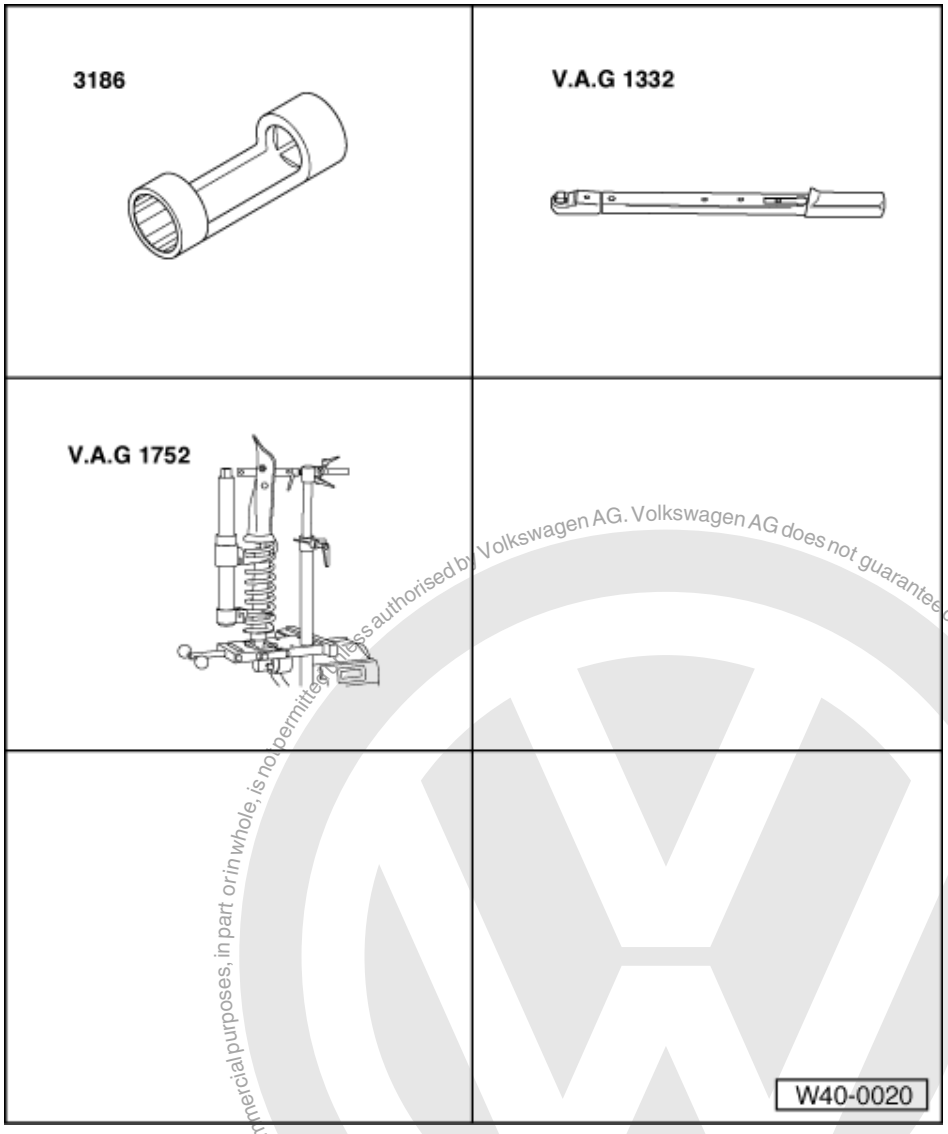

The strut for the Caddy 10.99 ‣ remains unchanged.

Special tools and workshop equipment required

- 3186 Socket insert 21 mm AF
- V.A.G 1332 Torque wrench
- V.A.G 1752 Suspension strut clamp
- 7 mm hexagon key (commercial available)

Protected by Copyright. Copying for private or commercial purposes, in part or in whole, is not permitted unless authorised by Volkswagen AG. Volkswagen AG does not guarantee or accept any liability with respect to the correctness of information in this document. Copyright by Volkswagen AG.
satelettronica

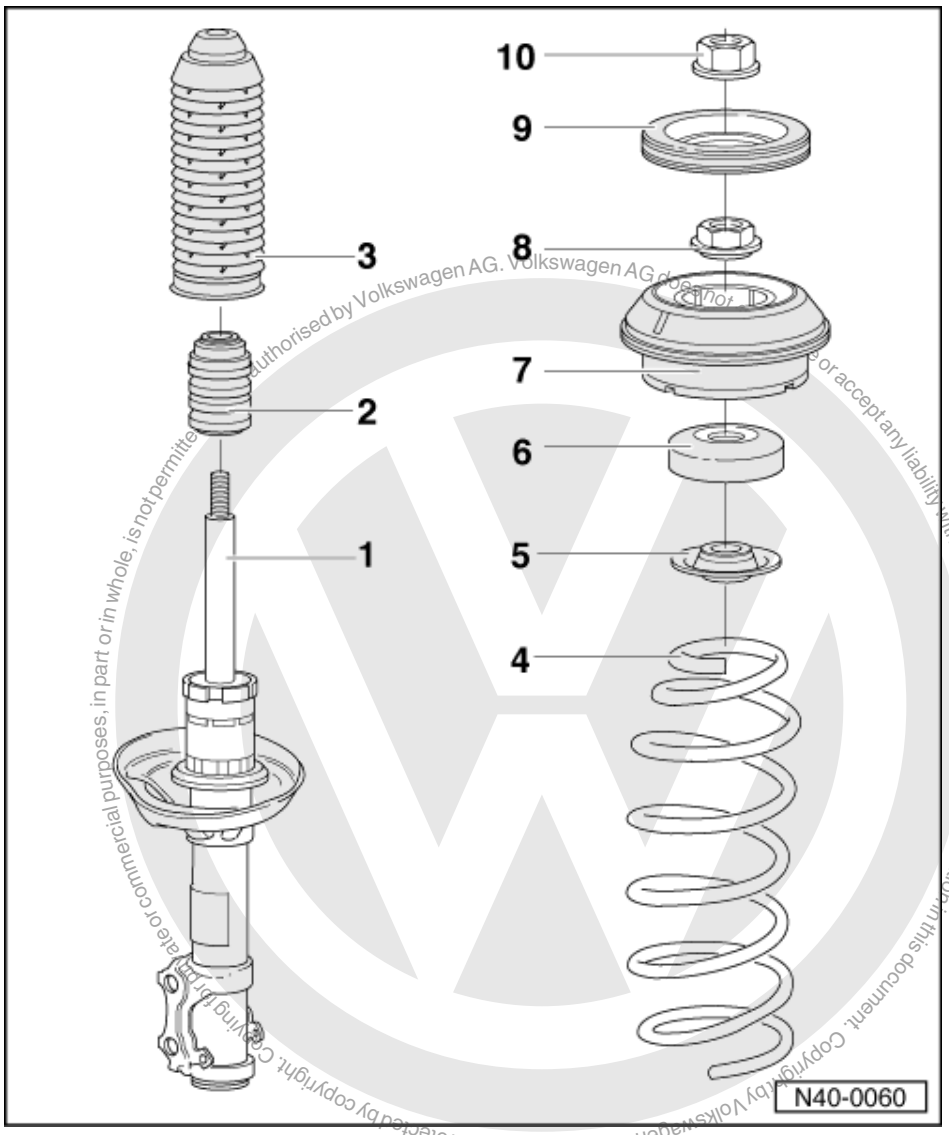

Protected by copyright. Copying for private or commercial purposes, in part or in whole, is not permitted unless authorised by Volkswagen AG. Volkswagen AG does not guarantee or accept any liability with respect to the correctness of information in this document. Copyright by Volkswagen AG.

1 Shock absorber
- Can be renewed individually
- Allocation

=> Replacement parts catalogue

- Disposal

=> Special information; Running gear No.2; Environmentally acceptable and economical disposal of oil-filled components

- Checking shock absorber for leaks and noises

=> Special information; Running gear No.17; Leaking shock absorbers, noisy shock absorbers

- After renewing set camber and track

2 Buffer stop
3 Protective sleeve
4 Coil spring
- Removing and installing =>Fig. 2
- Observe colour coding

satelettronica

- Outer surface of spring must not be damaged

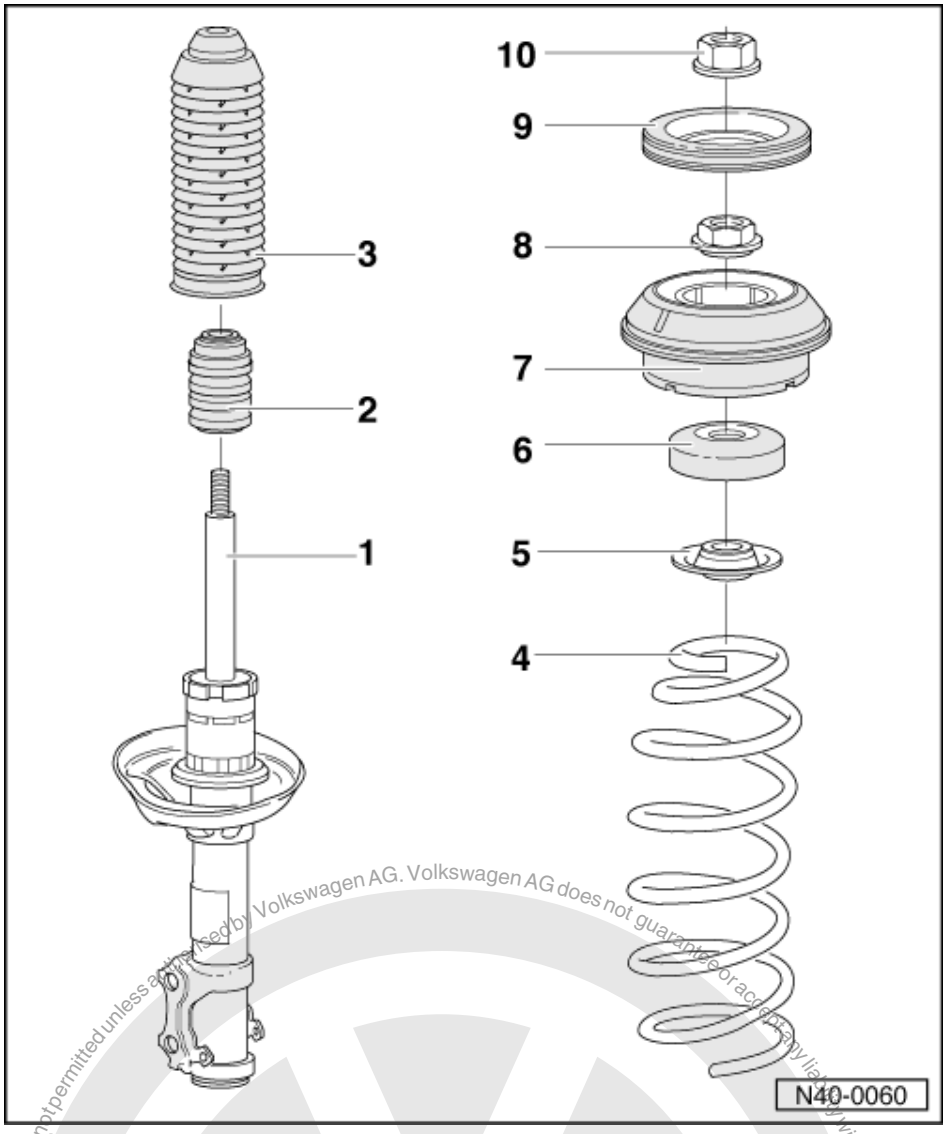

5 Spring plate
6 Axial ball bearing
7 Suspension strut mounting
8 Hexagon nut, 60 Nm
- Loosening and tightening =>Fig. 3

9 Stop
10 Self-locking nut, 60 Nm
- Loosening and tightening =>Fig. 1

Protected by copyright. Copying for private or commercial purposes, in part or in whole, is not permitted unless authorised by Volkswagen AG. Volkswagen AG does not guarantee or accept any liability with respect to the correctness of information in this document. Copyright by Volkswagen AG.

satelettronica

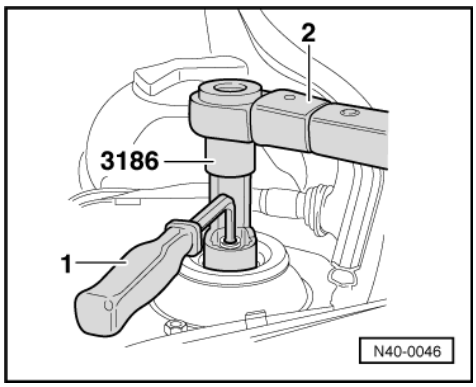

-> Fig.1 Loosening and tightening hexagon nut
1 - Hexagon key (7 m AF)
2 - V.A.G 1332

Note:
The suspension strut can also be removed and installed with shock absorber fitting tool T10001.

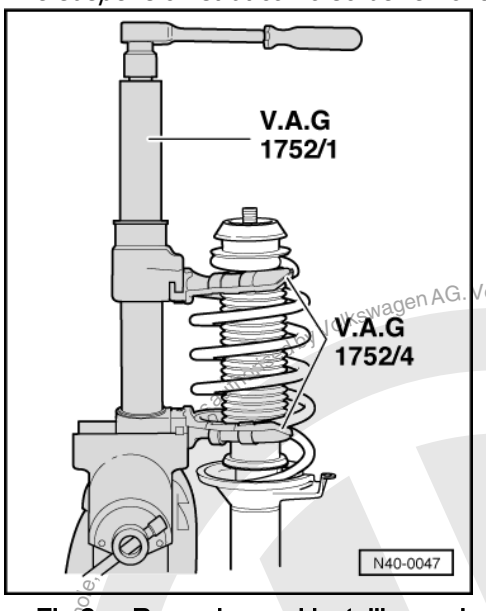

-> Fig.2 Removing and installing spring with spring clamping device V.A.G 1752

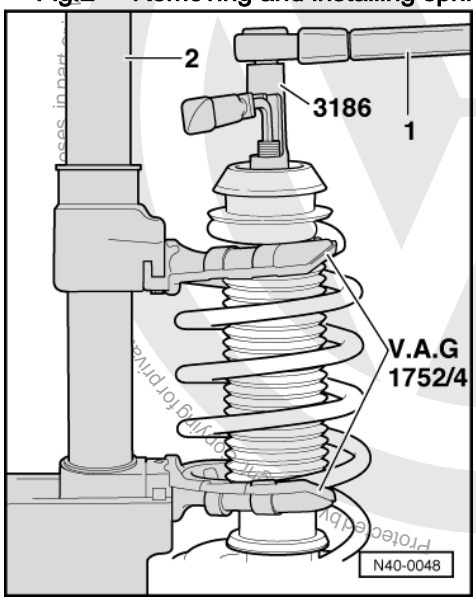

Volkswagen AG. Volkswagen AG does not guarantee or accept any liability with respect to the correctness of information in this document. Copyright by Volkswagen AG.
satelettronica

-> Fig.3 Loosening and tightening hexagon nut for upper spring plate

1 - V.A.G 1332
2 - V.A.G 1752/1 Suspension strut clamp

Note:

The suspension strut can also be removed and installed with shock absorber fitting tool T10001.

Attention!
Tension spring first, until upper spring plate pressure is relieved!

1.15 - III - Servicing front suspension strut, Polo Classic, Polo Estate 10.99 >

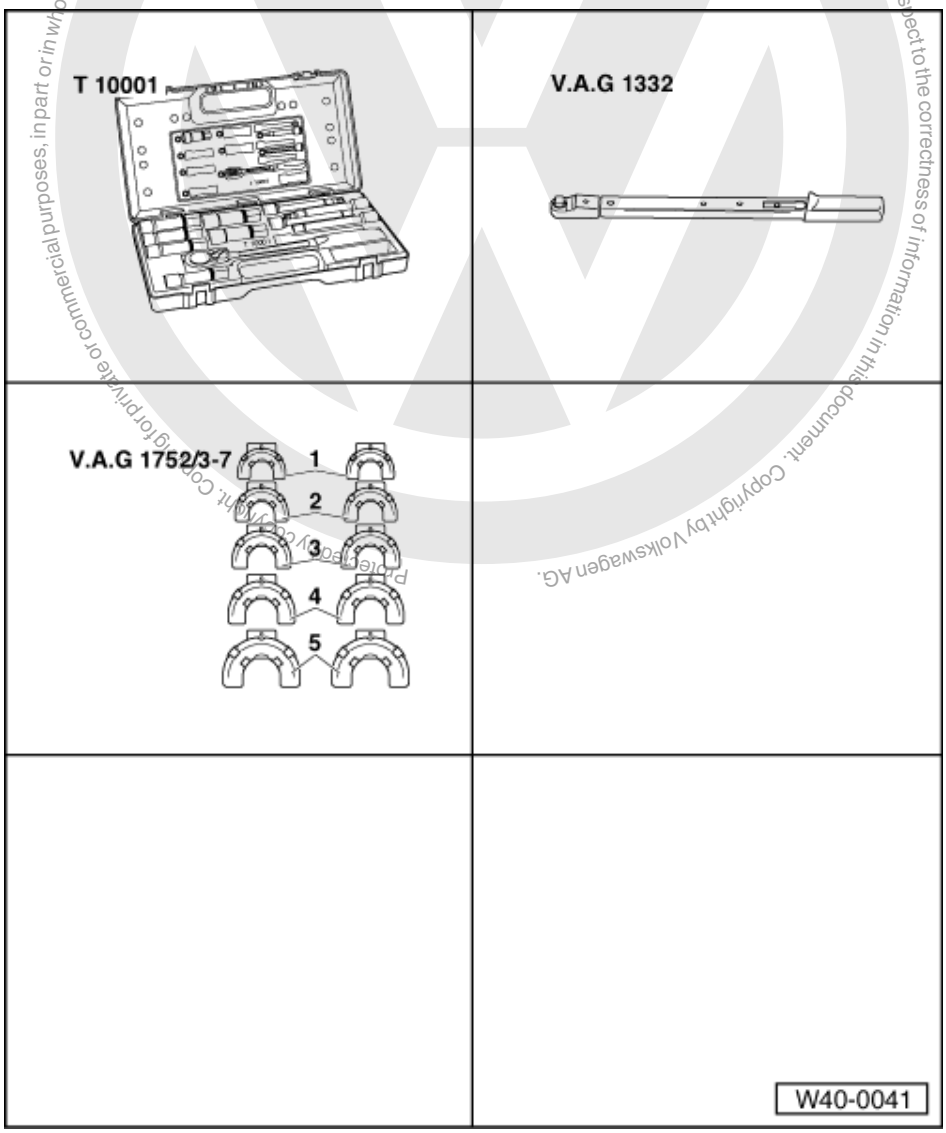

Special tools and workshop equipment required

- T10001 Special tools for struts/shock absorbers
- V.A.G 1332 Torque wrench
- V.A.G 1752/1 Suspension strut clamp

Copyright by Volkswagen AG. Volkswagen AG does not guarantee or accept any liability with respect to the correctness of information in this document. Copyright by Volkswagen AG. Reproduction, publication or commercial purposes, in part or in whole, is not permitted unless authorised by Volkswagen AG.
satelettronica

- V.A.G 1752/4 Spring retainer

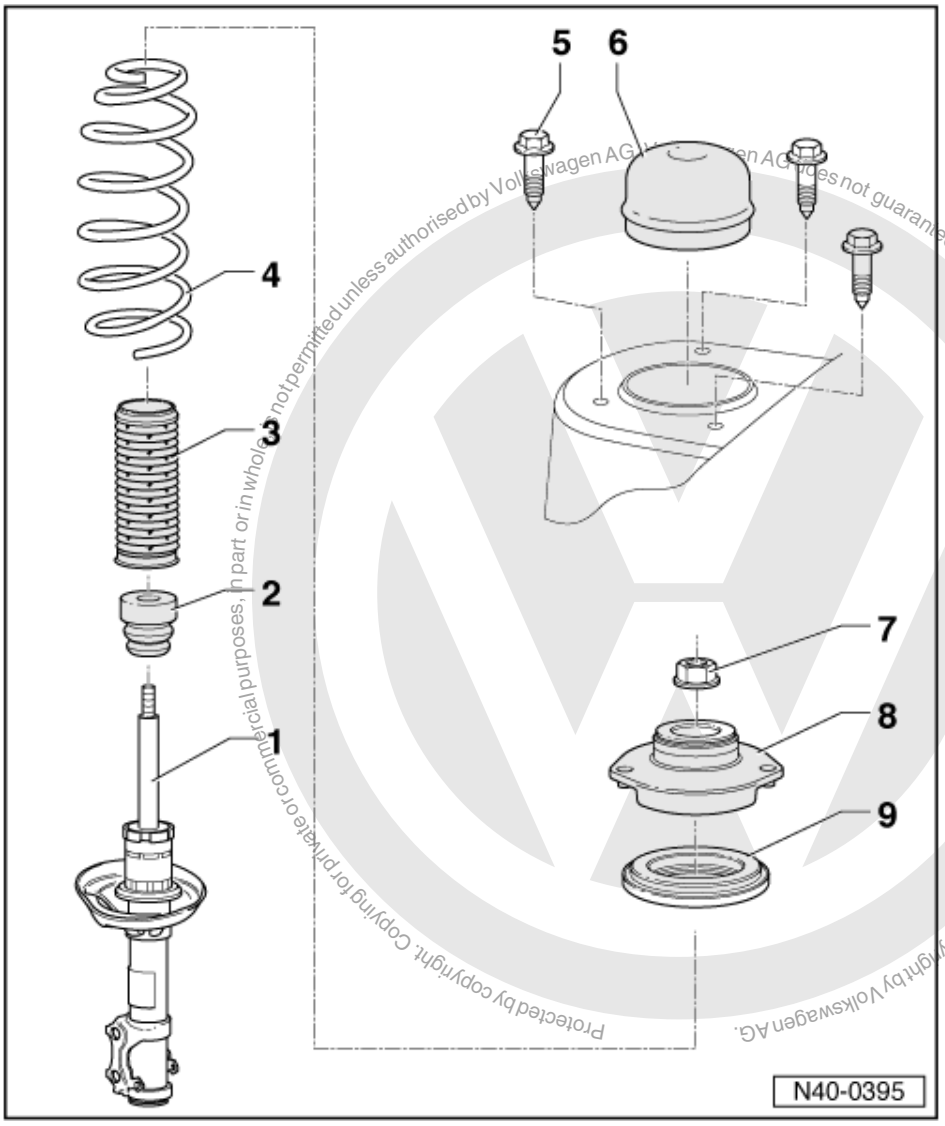

Protected by copyright. Copying for private or commercial purposes, in part or in whole, is not permitted unless authorised by Volkswagen AG. Volkswagen AG does not guarantee or accept any liability with respect to the correctness of information in this document. Copyright by Volkswagen AG.

satelettronica

1 Shock absorber
- Can be renewed individually
- Allocation

=> Replacement parts catalogue

- Disposal

=> Special information; Running gear No.2; Environmentally acceptable and economical disposal of oil-filled components

- Checking shock absorber for leaks and noises

=> Special information; Running gear No.17; Leaking shock absorbers, noisy shock absorbers

- After renewing set camber and track

2 Buffer stop
3 Protective sleeve
4 Coil spring
- Removing and installing =>Fig. 2
- Observe colour coding

- Outer surface of spring must not be damaged

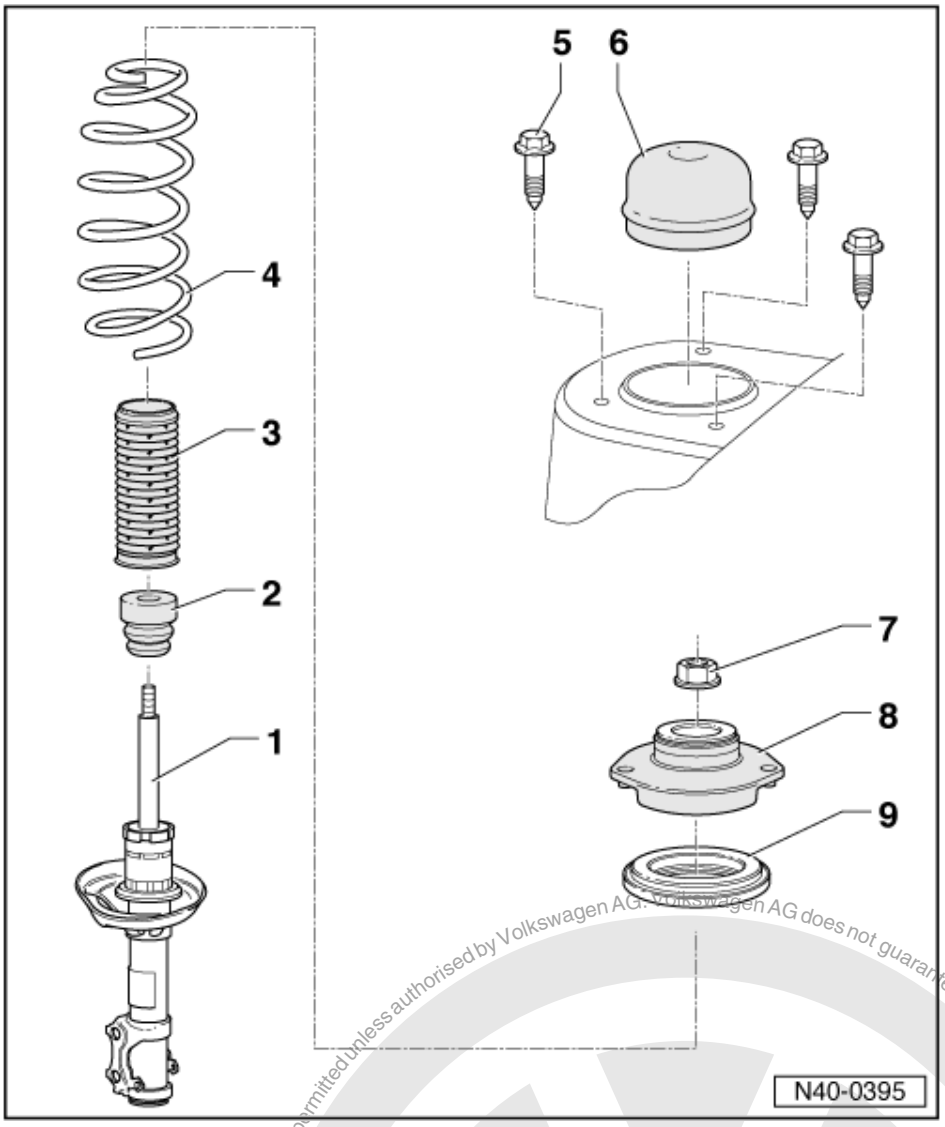

5 Hexagon head bolt
- 15 Nm and turn 180° further
- Renew each time after removing

6 Cap

7 Hexagon nut, 60 Nm
- Loosening and tightening =>Fig. 3

8 Suspension strut mounting
- Loosening and tightening =>Fig. 1

9 Axial ball bearing

Protected by copyright. Copying for private or commercial purposes, in part or in whole, is not permitted unless authorised by Volkswagen AG. Volkswagen AG does not guarantee or accept any liability with respect to the correctness of information in this document. Copyright by Volkswagen AG.
satelettronica

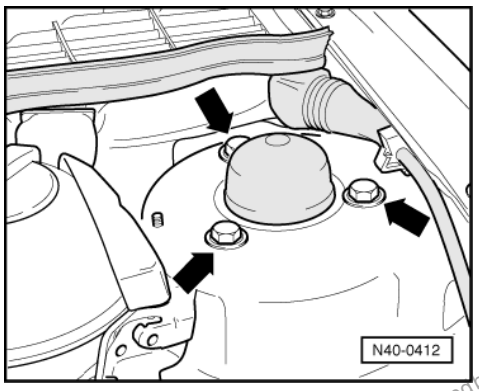

-> Fig.1 Loosening and tightening suspension strut mounting -arrows-

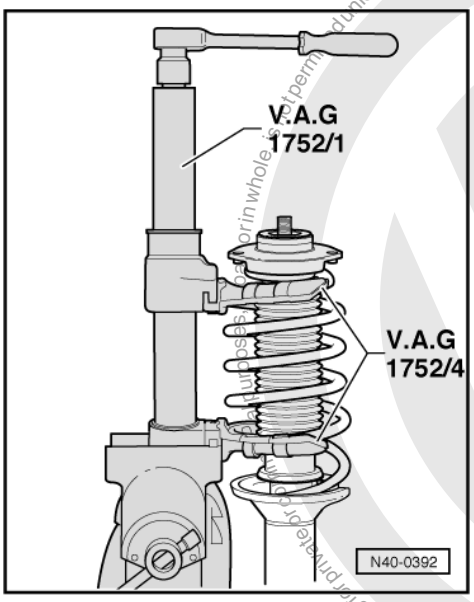

-> Fig.2 Removing and installing spring with spring clamping device V.A.G 1752/1

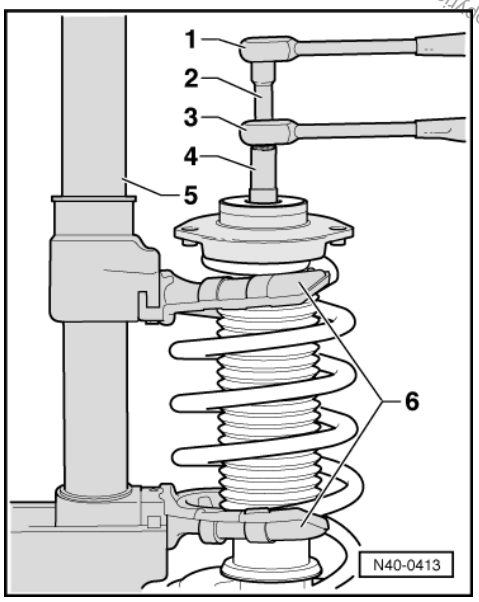

Protected by copyright. Copying for private or commercial purposes, in whole or in part, is not permitted unless authorised by Volkswagen AG. Volkswagen AG does not guarantee or accept any liability with respect to the correctness of information in this document. Copyright by Volkswagen AG.
satelettronica

-> Fig.3 Loosening and tightening nut for suspension strut mounting

1 - V.A.G 1332
2 - T 10001/7
3 - T 10001/11
4 - T 10001/5
5 - V.A.G 1752/1
6 - V.A.G 1752/4

Attention!
Tension spring first, until upper spring plate pressure is relieved!

2 - Servicing drive shafts

2.1 - Servicing drive shafts

2.2 - Removing and installing drive shafts

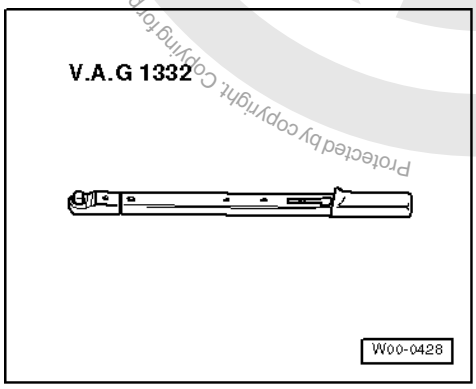

Special tools and workshop equipment required

- V.A.G 1332 Torque wrench

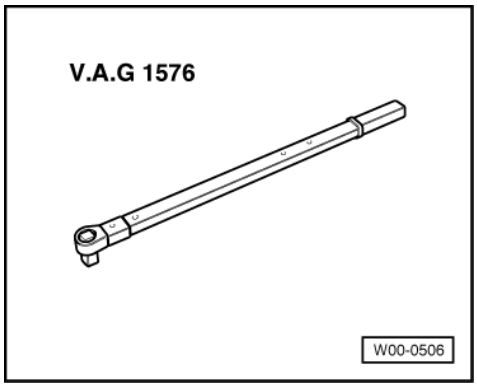

- V.A.G 1576 Torque wrench

Removing

The wheel bearings must not be loaded when hexagon nuts are loose.

satelettronica

If the bearings are loaded by the vehicles own weight, the wheel bearings will be stressed and the life expectancy reduced.

If a vehicle has to be moved after removing the drive shaft, first install an outer joint and tighten to 50 Nm instead of the drive shaft, otherwise the wheel bearing will be damaged.

- Lift vehicle until the load on the front axle is relieved.

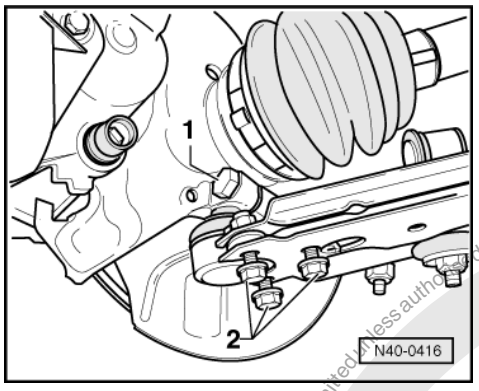

- Loosen drive shaft hexagon nut.

Vehicles with 13" wheels

- -> Remove bolt -1-.

Vehicles with 14" wheels

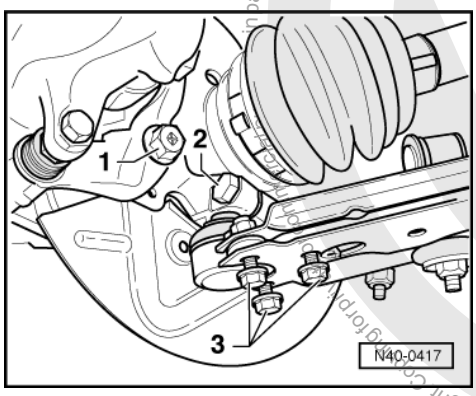

- -> Remove bolt -1- from brake caliper mounting.
- Remove bolt -2-.

Continued for all vehicles

- Pull wishbone together with swivel joint out of wheel bearing housing.
- Disconnect drive shaft from gearbox drive flange.
- Take out drive shaft.

  The drive shaft must not hang down!

The inner joint will otherwise be damaged through overflexing.

Installing

Remove any paint residue and/or corrosion on thread/splines of the outer joint.

- Fit drive shaft.
- Bolt drive shaft to flanged shaft at gearbox.

Protected by copyright. Copying for private or commercial purposes, in part or in whole, is not permitted unless authorised by Volkswagen AG. Volkswagen AG does not guarantee or accept any liability with respect to the correctness of information in this document. Copyright by Volkswagen AG.
satelettronica

- Guide outer joint into wheel hub splines as far as possible.

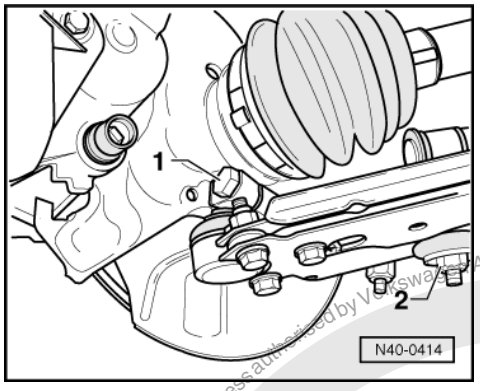

Vehicles with 13" wheels

- -> Tighten bolt -1- with new self-locking nut.

Vehicles with 14" wheels

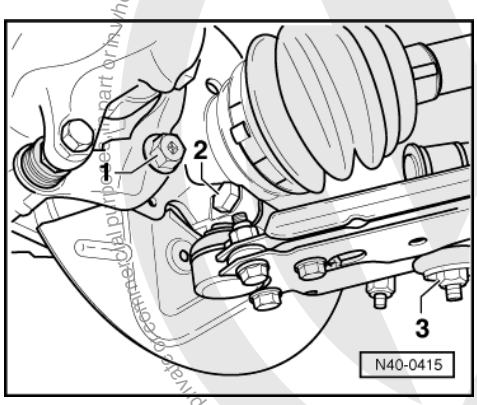

- -> Tighten bolt -2- with new self-locking nut.
- Clean ribs of self-locking combi-bolt and insert it.

Continued for all vehicles

- Lower vehicle until the wheels touch ground.
- Bolt drive shaft to hub using new hexagon nuts.

Tightening torques

Swivel joint to wheel bearing housing	50 Nm
Hexagon nut for drive shaft to wheel hub	265 Nm
Self-locking combi-bolt to brake caliper mounting	125 Nm
Multi-point socket head bolt, constant velocity joint to gearbox	45 Nm
Multi-point socket head bolt, tripod joint to gearbox	40 Nm

Copyright by Volkswagen AG. Volkswagen AG does not guarantee or accept any liability with respect to the correctness of information in this document. Copyright by Volkswagen AG. Protected by copyright. Copying for private or commercial purposes, in part or in whole, is not permitted unless authorised by Volkswagen AG.
satelettronica

2.3 - IV - Servicing drive shaft with constant velocity joint

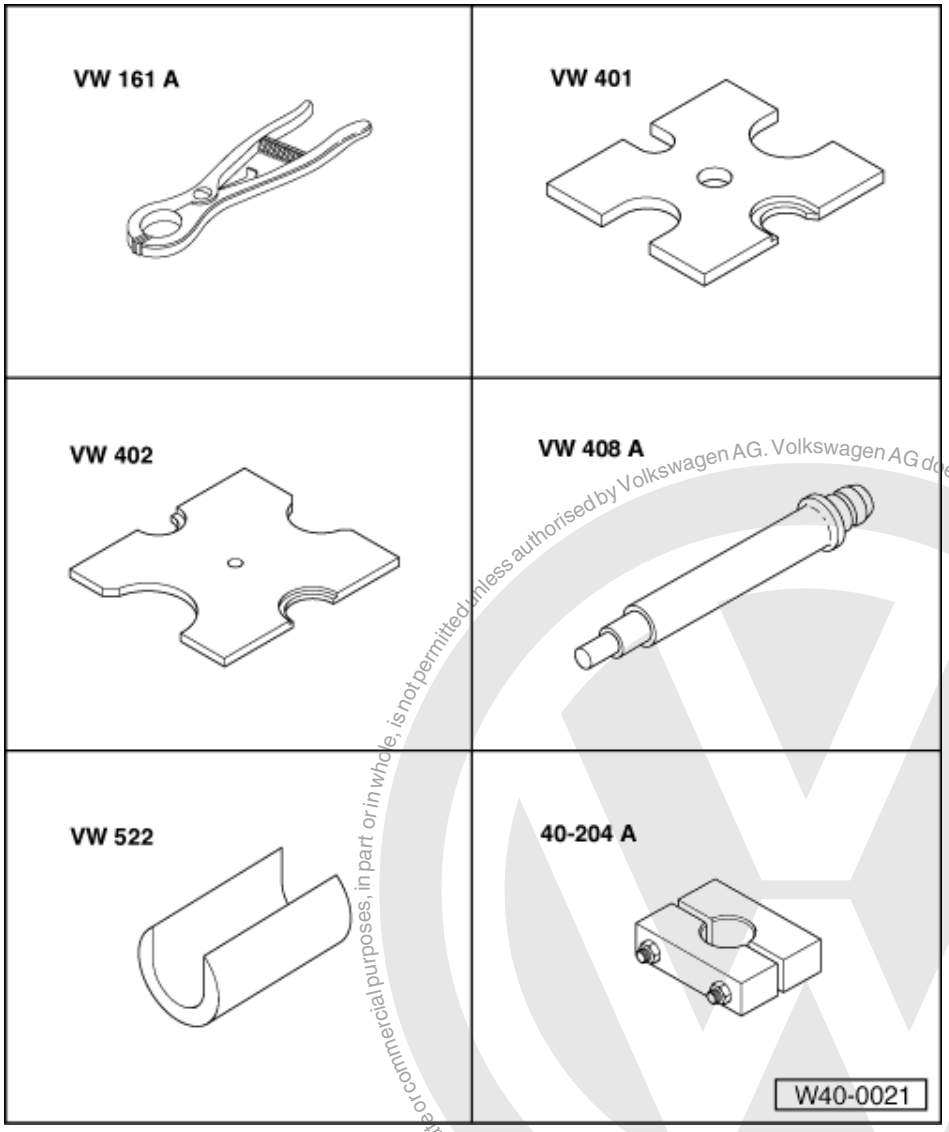

Protected by copyright. Copying for private or commercial purposes, in part or in whole, is not permitted unless authorised by Volkswagen AG. Volkswagen AG does not guarantee or accept any liability with respect to the correctness of information in this document. Copyright by Volkswagen AG.

satelettronica

Special tools and workshop equipment required

- VW 161 A Circlip pliers
- VW 401 Press plate
- VW 402 Press plate
- VW 408 A Press tool
- VW 522 Support sleeve
- 40-204 A Tensioner

Volkswagen AG does not guarantee or accept any liability with respect to the correctness of information in this document. Copyright by Volkswagen AG. Protected by copyright. Distribute or commercial purposes, in part or in whole, is not permitted unless authorised by Volkswagen AG.

Special tools and workshop equipment required

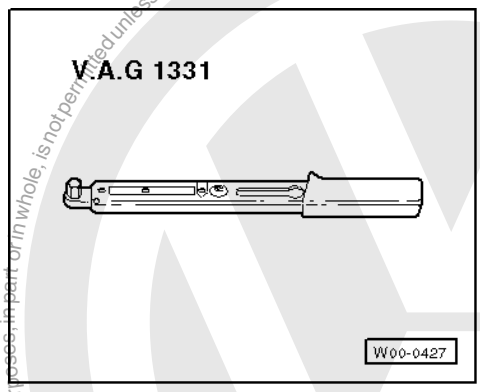

- V.A.G 1331 Torque wrench

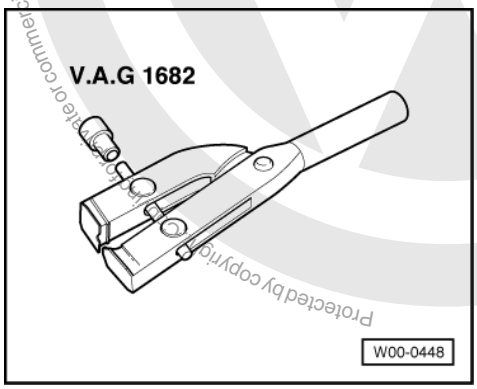

- V.A.G 1682 Tensioning pliers

Greasing joints

- Quantity of grease for vehicles up to 48 kW: outer and inner 90 gramme G 6.3
- Quantity of grease for vehicles with 55 kW and above:
- Outer: 110 gramme G 6.3
- Inner: 120 gramme G 6.3
- Greasing outer joint: press half of the grease into the joint, and the other half evenly into the bellows.
- Greasing inner joint: press half of the grease into the inner joint from both sides, the other half evenly into the bellows.
- When renewing the bellows grease joint as required.

satelettronica

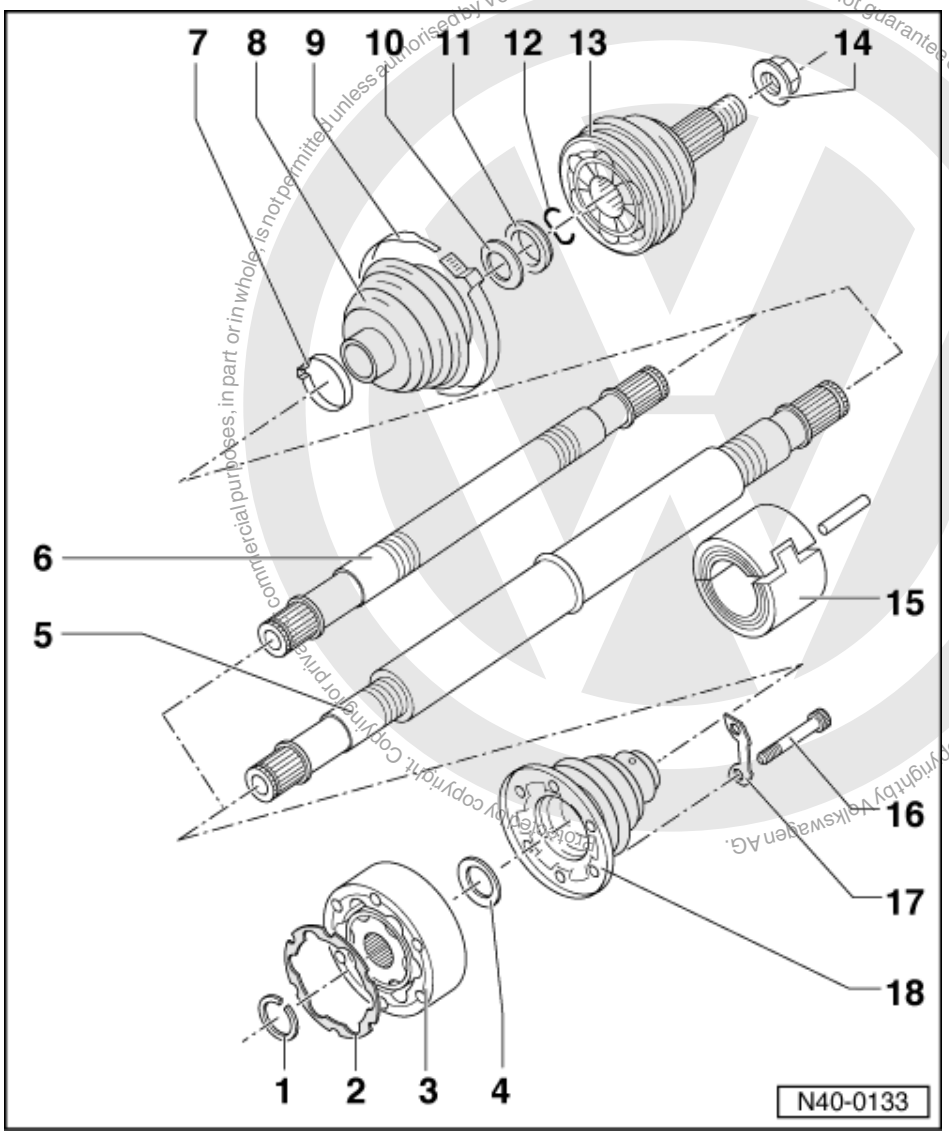

1 Circlip
- Renew
- Remove and install with VW 161 A

2 Gasket
- Renewing. Pull off protective foil and stick onto joint.

3 Inner constant velocity joint
- Only renew complete
- Pressing off => Fig. 1
- Pressing on => Fig. 2
- Greasing => Page 60
- Checking => Page 72

4 Dished washer
- Inner øsplined
- Installation position: outer ø(concave side) contacts constant velocity joint

5 Drive shaft, right (tube shaft)
- Allocation

=> Replacement parts catalogue

satelettronica

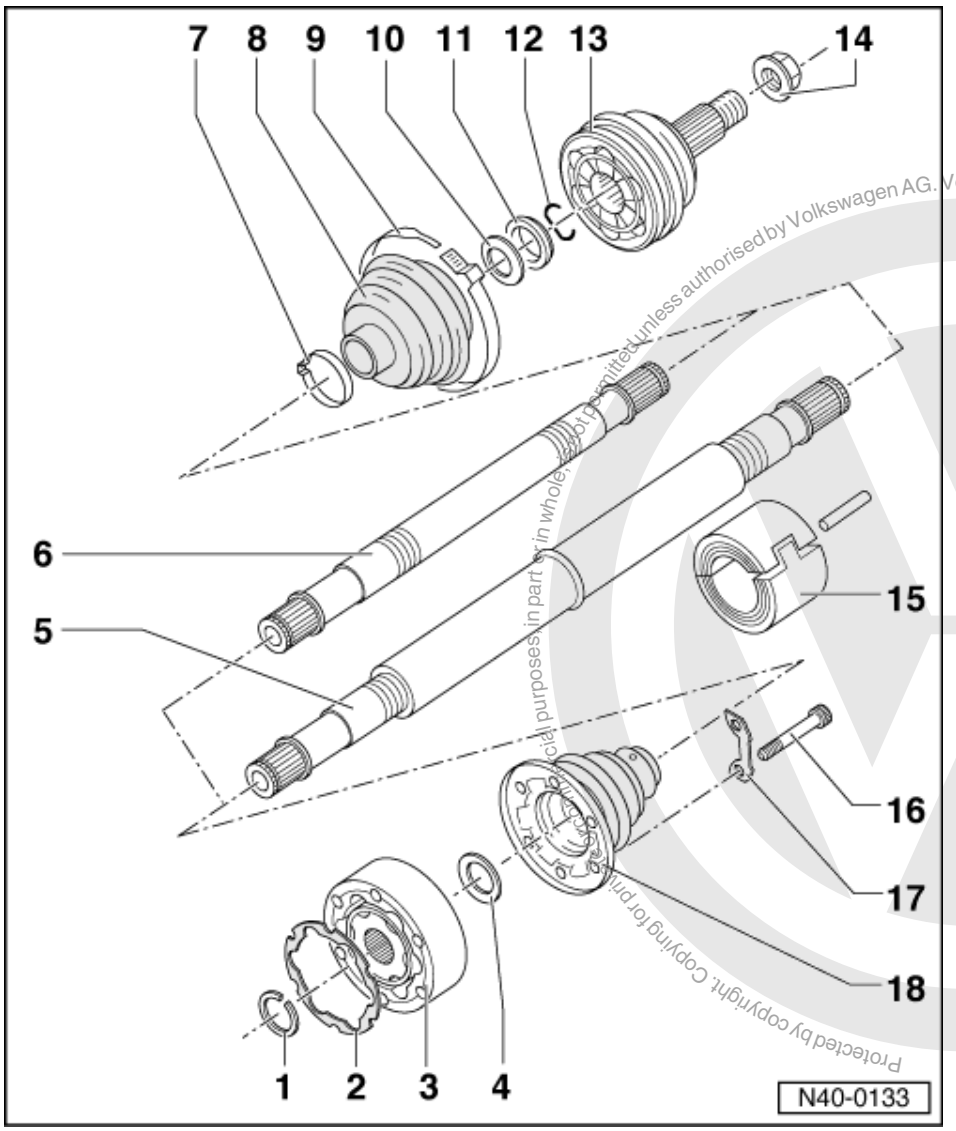

Protected by copyright. Copying for private or commercial purposes, in part or in whole, is not permitted unless authorised by Volkswagen AG. Volkswagen AG does not guarantee or accept any liability with respect to the correctness of information in this document. Copyright by Volkswagen AG.
satelettronica

6 Drive shaft, left (solid shaft)
- Allocation

=> Replacement parts catalogue

7 Hose clip
- Renew
- Tensioning => Fig. 6

8 Protective bellows
- Check for tears and chafing
- To balance the pressure briefly ventilate bellows before tensioning the small clamp=>Fig. 7

9 Hose clip
- Renew
- Tensioning => Fig. 5

10 Dished washer
- Outer ø (concave side) contacts thrust washer

11 Thrust washer

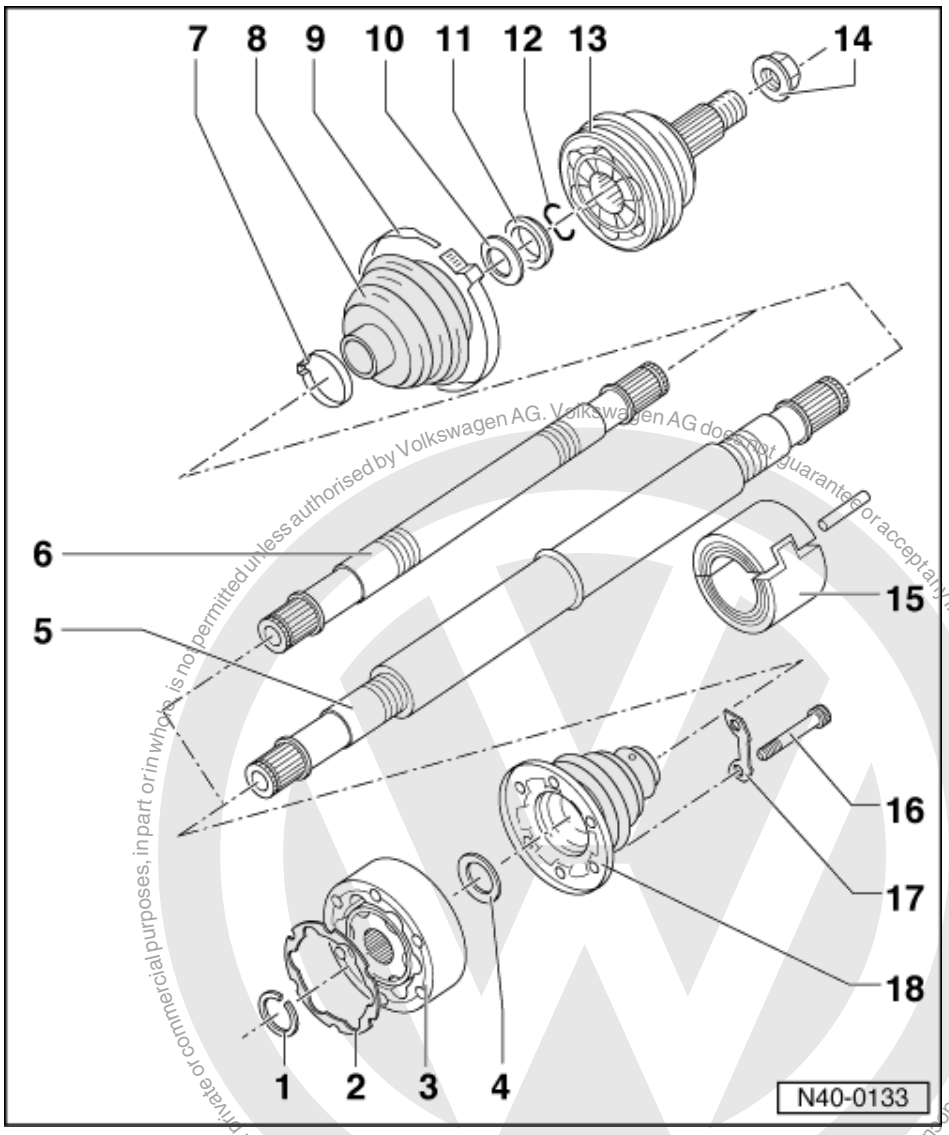

Protected by copyright. Copying for private or commercial purposes, in part or in whole, is not permitted unless authorised by Volkswagen AG. Volkswagen AG does not guarantee or accept any liability with respect to the correctness of information in this document. Copyright by Volkswagen AG.

12 Circlip
- Renew
- Insert in shaft groove

13 Outer constant velocity joint
- Only renew complete
- Removing =>Fig. 8
- Installing: drive onto shaft on to stop with plastic hammer
- Greasing => Page 60
- Checking => Page 70

14 Self-locking hexagon nut, 265 Nm

15 Vibration damper
- Removing and installing =>Fig. 9
- Installation position =>Fig. 10 and Fig. 11
- Is only installed on the right drive shaft tube.
- Allocation

=> Replacement parts catalogue

satelettronica

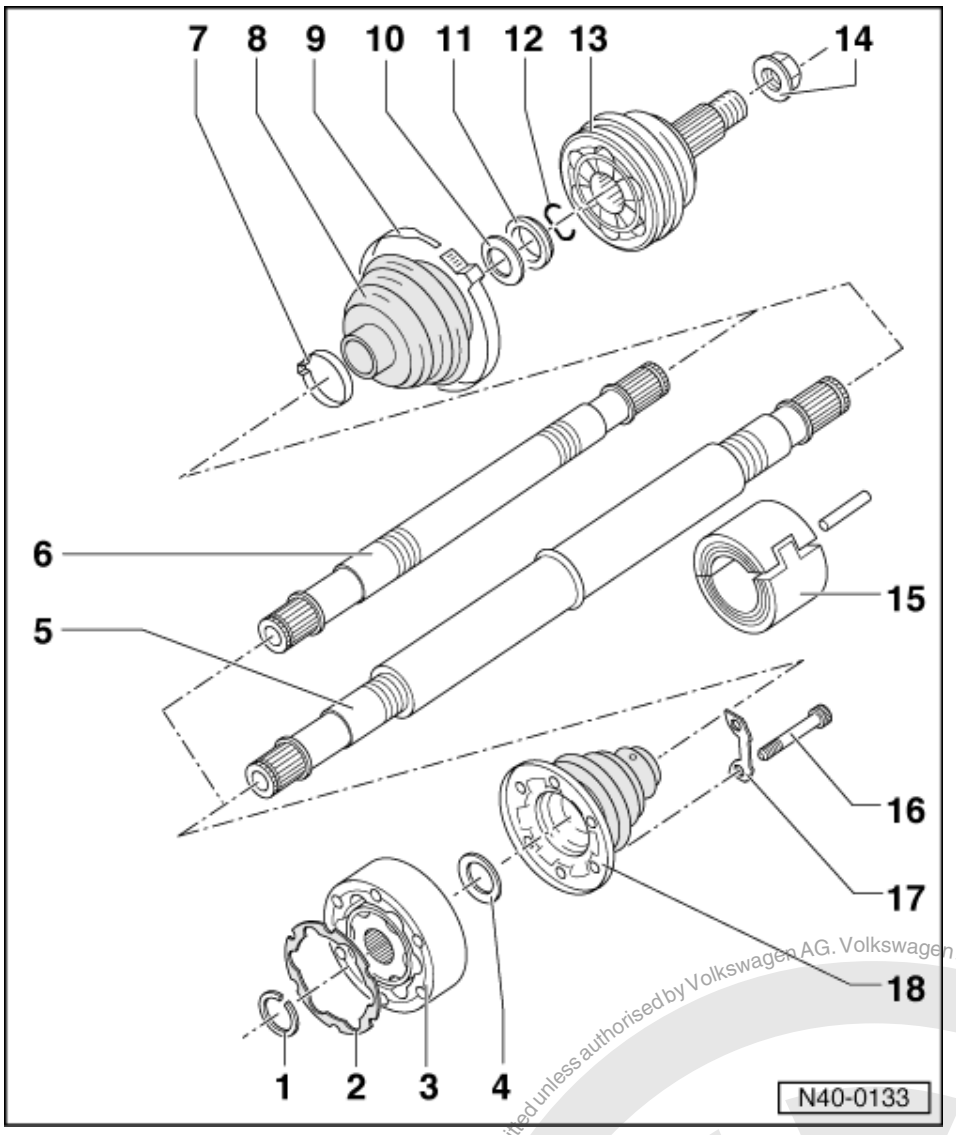

16 Socket head multi-point bolt, 45 Nm

17 Plate

18 Protective bellows for inner constant velocity joint

- Check for tears and chafing
- Installation position for left drive shaft => Fig. 3
- Installation position for right drive shaft => Fig. 4
- Drive off with drift

Protected by copyright. Copying for private or commercial purposes, in part or in whole, is not permitted unless authorised by Volkswagen AG. Volkswagen AG does not guarantee or accept any liability with respect to the correctness of information in this document. Copyright by Volkswagen AG.
satelettronica

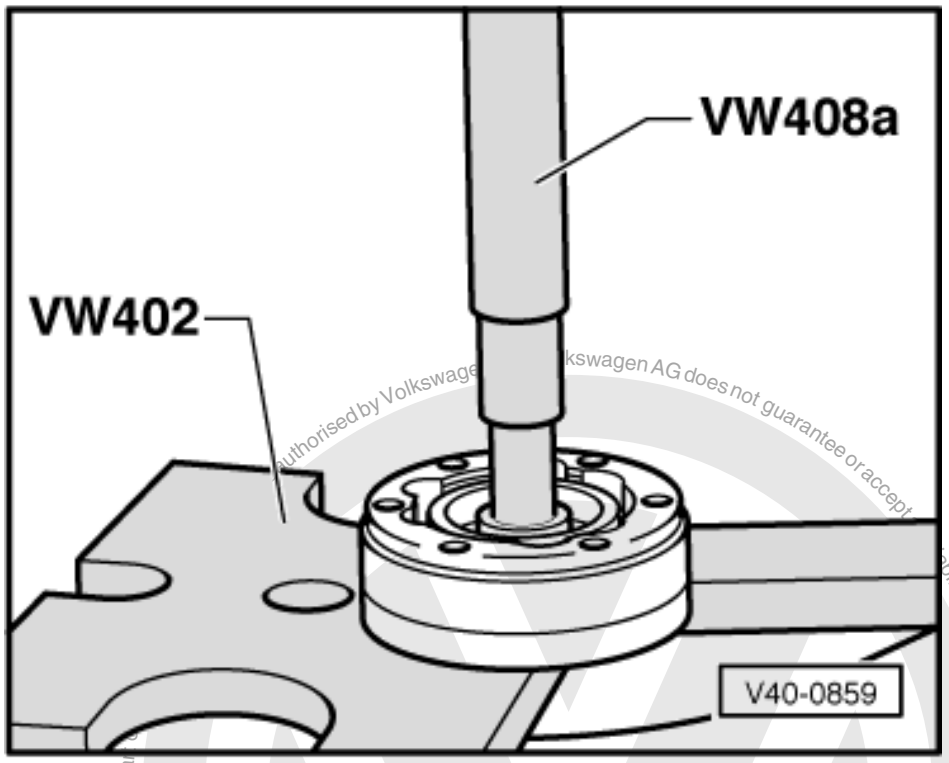

-> Fig.1 Pressing off inner constant velocity joint

Notes:

- First drive bellows off with drift
- Support ball hub

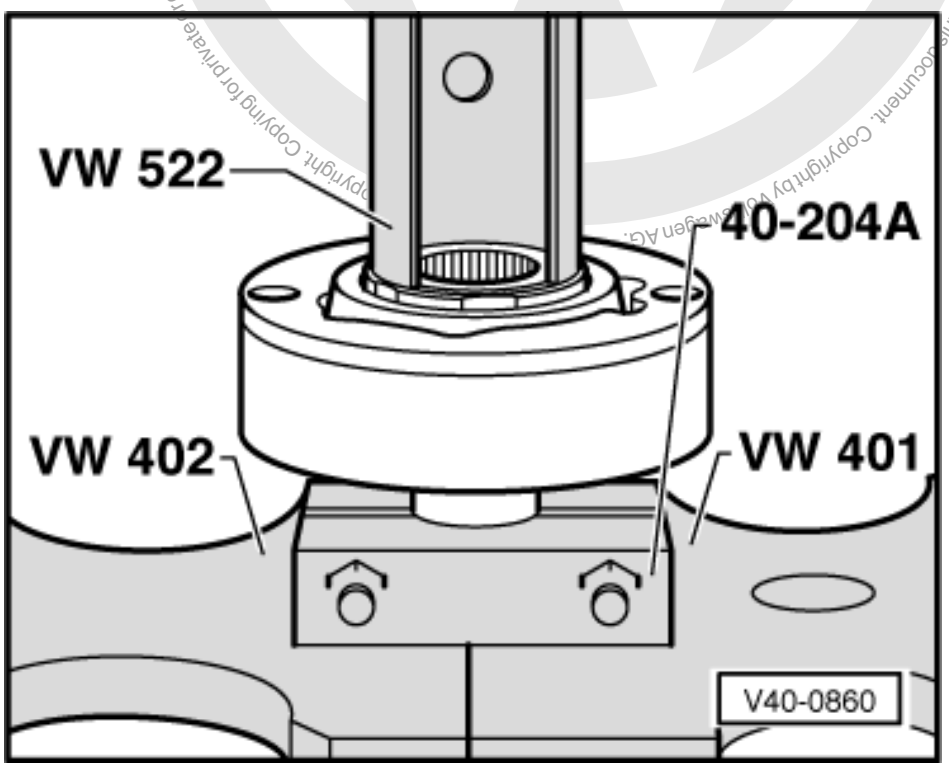

satelettronica

-> Fig.2 Pressing on inner constant velocity joint

- Press on joint up to stop.
- Insert circlip.

Note:

Chamfer on inner diameter of ball hub (splines) must face the contact shoulder on the drive shaft.

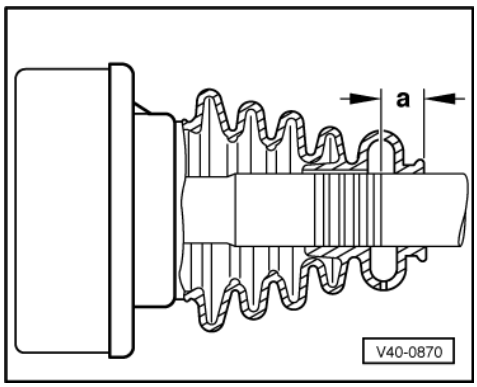

-> Fig.3 Installation position of left drive shaft joint bellows

Dimension a = 17 mm

Note:

Before assembling bellows on drive shaft mark position, dimension -a-, with for example paint or adhesive tape. Under no circumstances should paint surface be damaged.

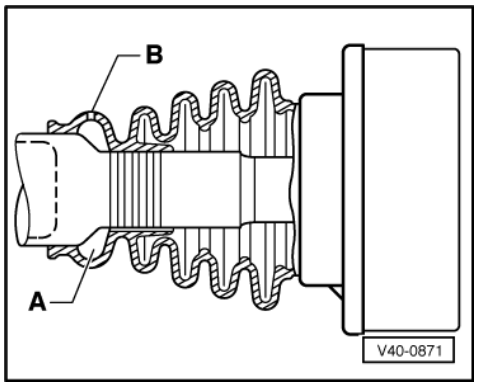

-> Fig.4 Installation position of right drive shaft joint bellows

The large diameter of vent chamber -A- must fit on the larger diameter.

B - Vent hole

Copyright by Volkswagen AG. Volkswagen AG does not guarantee or accept any liability with respect to the correctness of information in this document. Copying for private or commercial purposes, in part or in whole, is not permitted unless authorised by Volkswagen AG.
satelettronica

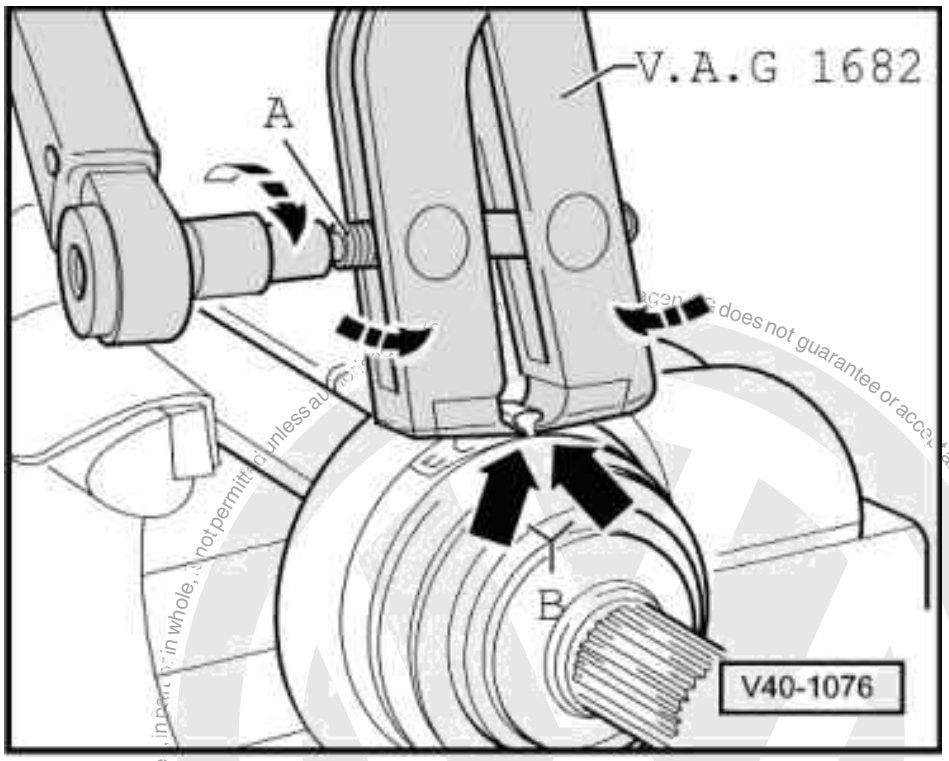

-> Fig.5 Tensioning hose clamp on outer joint

- Fit pliers V.A.G 1682 as shown in illustration. Thereby ensure that the jaws of the pliers seat in the corners (arrow B) of the hose clamp.
- Tension hose clamp by turning the spindle with a torque wrench (do not cant pliers).

Notes:

- Due to the hard material of the joint bellows (compared to rubber) and, due to this the necessary stainless steel hose clamp, it is only possible to tension the hose clamp with pliers V.A.G 1682.
- Tightening torque: 25 Nm.
- Use torque wrench -C- with 5...50 Nm range (e.g. V.A.G 1331).

Protected by copyright. Copyright by Volkswagen AG.
Volkswagen AG does not guarantee or accept any liability with respect to the correctness of information in this document. Copyright by Volkswagen AG. Not permitted unless authorised. Not for private or commercial purpose, in part or in whole.
satelettronica

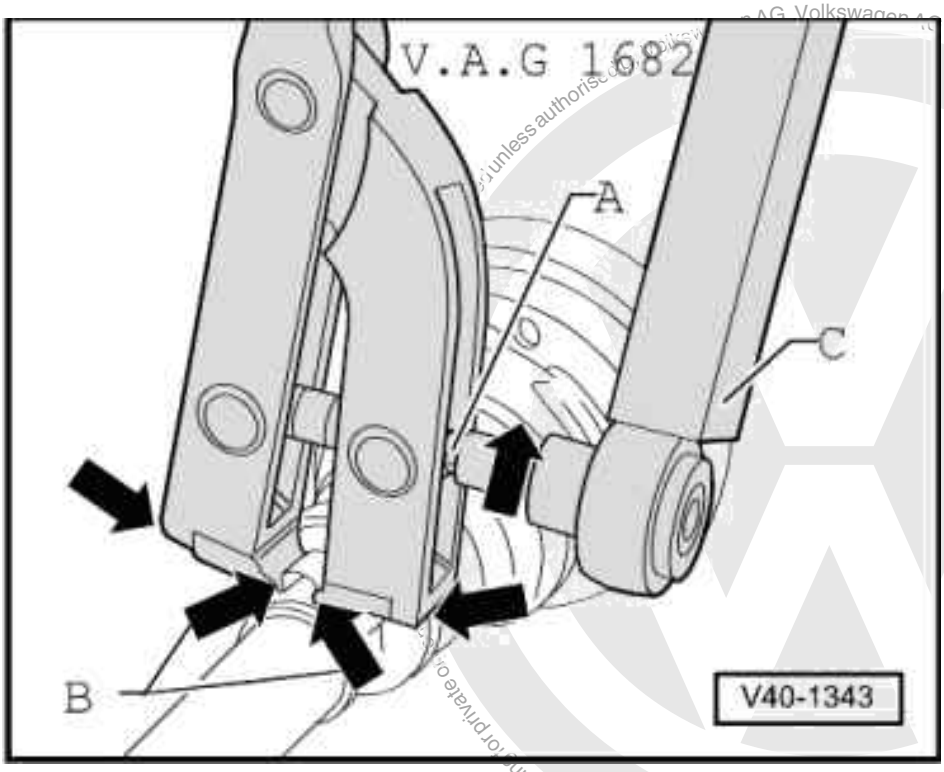

- Ensure that the spindle thread -A- is not tight. If necessary lubricate with MOS 2 grease
- If the thread is tight e.g. dirty, the required tensioning force for the hose clamp will not be achieved in spite of correct tightening torque settings.

-> Fig.6 Tensioning small hose clamp on outer joint

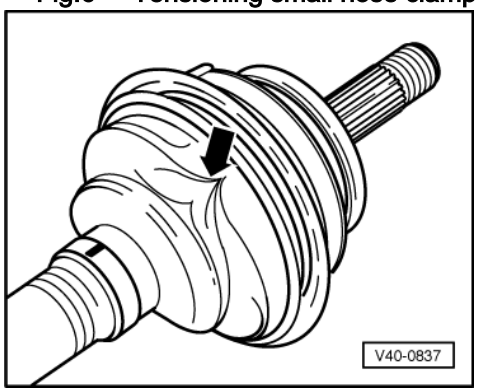

-> Fig.7 Ventilating joint bellows

Often the bellows is pushed in when installing on the joint body. This creates a vacuum inside the bellows which draws a fold in (arrow) whilst driving. Therefore after fitting, lift the bellows at small diameter end to equalize pressure.

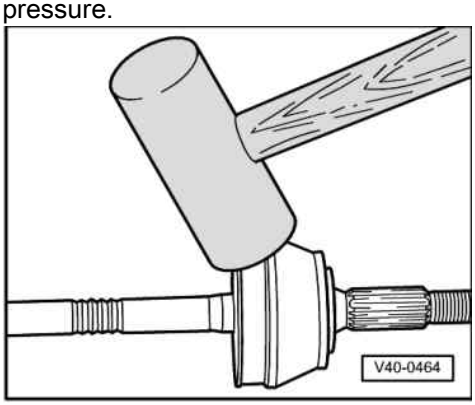

Protected by copyright. Copyright by Volkswagen AG. Volkswagen AG does not guarantee or accept any liability with respect to the correctness of information in this document.
satelettronica

-> Fig.8 Removing outer constant velocity joint

- Drive joint off drive shaft with a firm blow from an aluminium hammer.

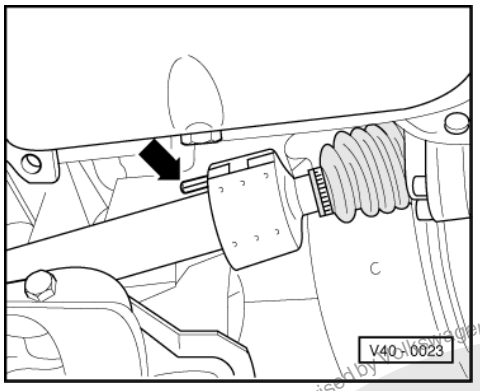

-> Fig.9 Removing and installing vibration damper

The damper consists of two halves. Both halves are joined to one another by spring pins (arrow).
Installation position => Fig. 10

Notes:

- Only renew vibration damper with drive shaft removed
- Before driving in spring pin protect shaft paint finish against damage.
- To prevent axial movement apply adhesive tape or a suitable adhesive to internal diameter .

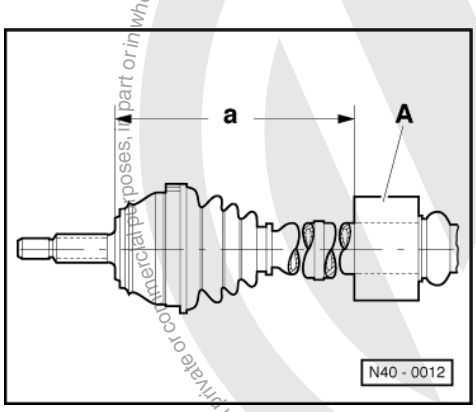

-> Fig.10 Vibration damper installation position

When installing vibration damper -A- note correct installation position. Ensure dimension "a" is maintained.

Dim. "a" mm	Engine
478	1.6 l - 55 kW
	1.6 l - 74 kW
175	1.4 l - 44 kW

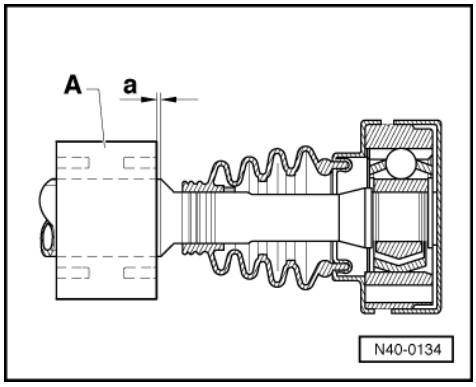

satelettronica

-> Fig.11 Installation position of vibration damper -A- (vehicles with Diesel engine)

Dimension "a" = 4 mm

2.4 - Checking outer constant velocity joint

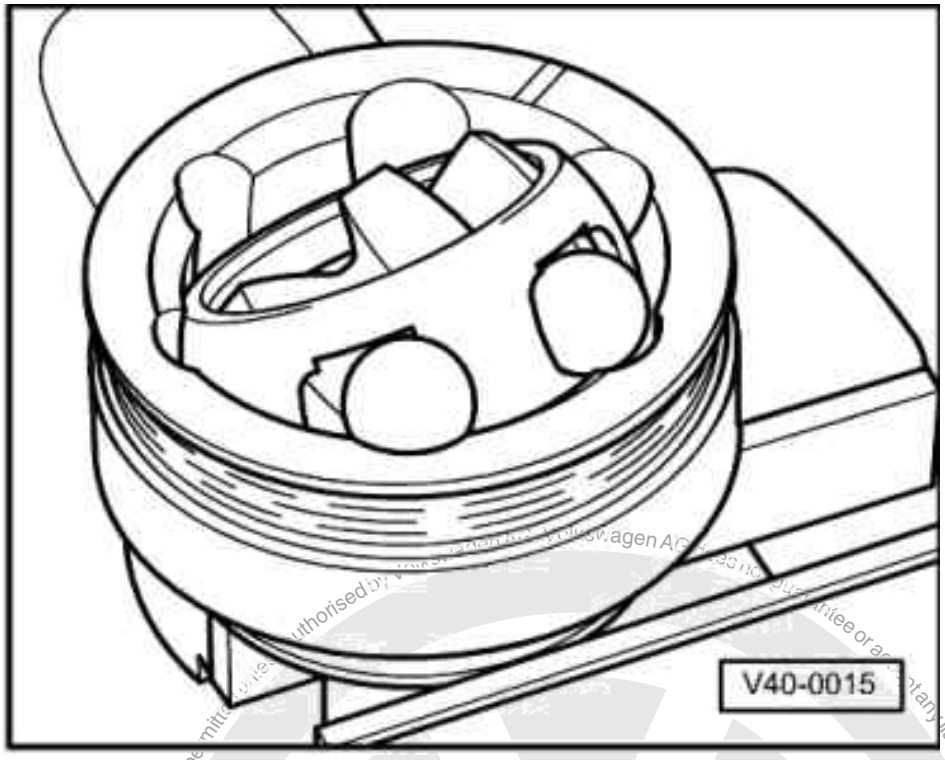

The joint should be dismantled to renew dirty grease or for checking the balls and ball tracks for wear and damage.

Removing

- -> Before dismantling mark position of the ball hub in relation to the ball cage and housing with an electric scriber or oil stone.
- Swivel ball hub and ball cage.
- Remove balls one after the other.

satelettronica

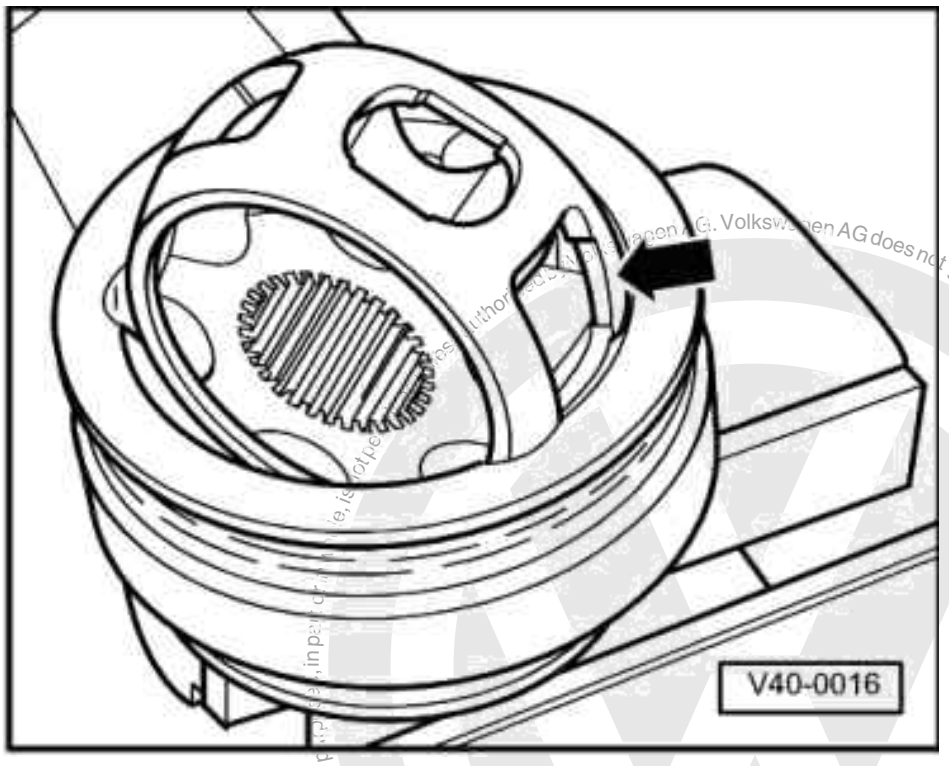

- -> Turn cage until the two rectangular windows (arrow) are aligned with the joint housing.
- Lift out cage together with hub.

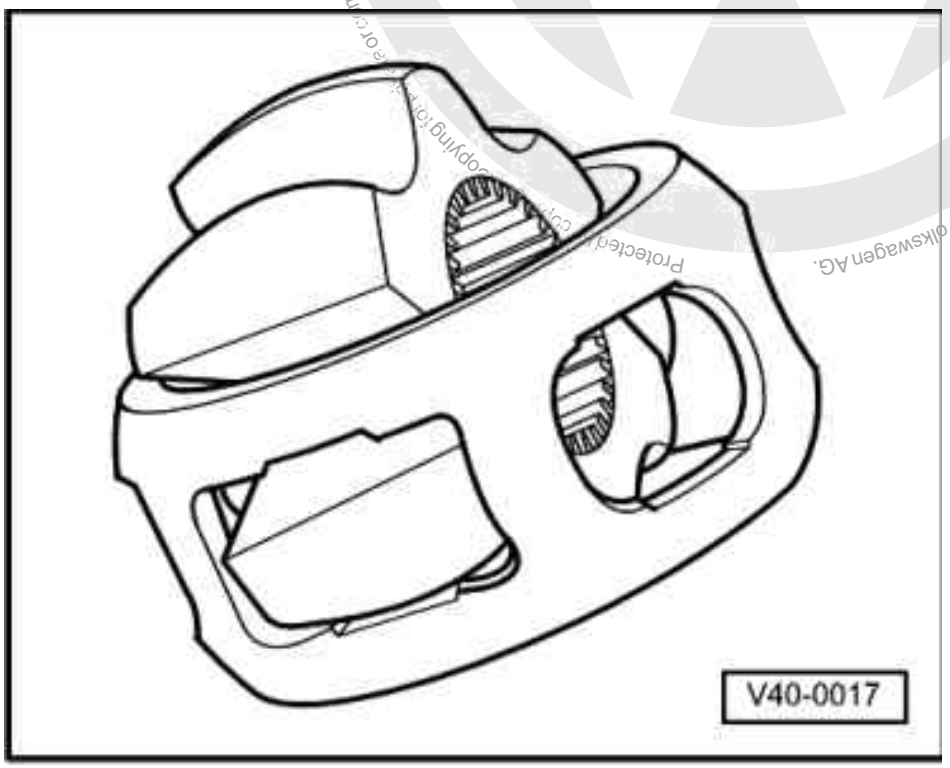

- -> Swing segment of hub into rectangular cage window.
- Tilt hub out of cage.

The 6 balls of each joint belong to one tolerance group. Check stub axle, hub, cage and balls for indentations (pitting) and signs of seizure. Excessive backlash in joint will be noticed as a knock during load changes. In

Protected by copyright. Copying for commercial purposes, in part or in whole, is not permitted without authorisation by Volkswagen AG. Volkswagen AG does not guarantee or accept any liability with respect to the correctness of information in this document. Copyright by Volkswagen AG.
satelettronica

such cases the joint must be renewed. Polished areas and ball track marks are not a reason for changing the joint.

Installing:

- Press half of the total amount of grease (55 gramme) into the joint housing.
- Install cage with hub in the joint housing.
- Press in the balls one after the other from opposite sides whereby the original position of the hub to cage and joint housing must be restored.
- Fit new circlip in the hub.
- Distribute the remaining grease in the bellows.

2.5 - Checking inner constant velocity joint

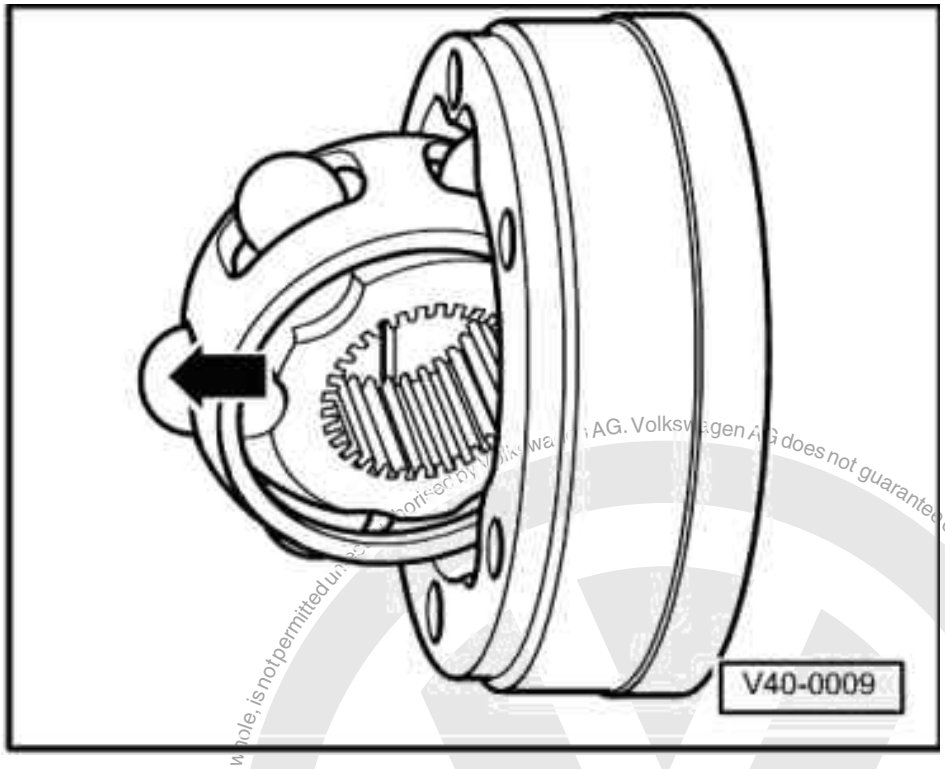

The joint should be dismantled to renew dirty grease and when checking the balls and ball tracks for wear and damage.

- -> Swivel ball hub and ball cage.
- Press out ball cage in direction of arrow.
- Press balls out of cage.

Note:

The ball hub and joint are paired and must not be interchanged.

satelettronica

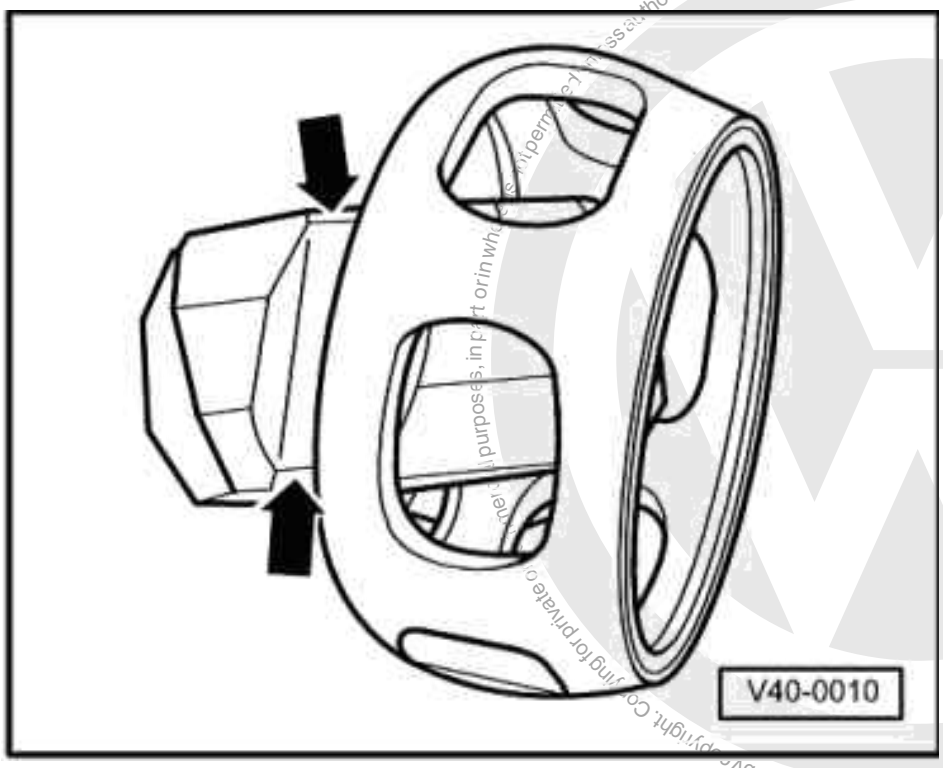

- -> Tilt ball hub out of ball cage over ball track (arrows).
- Check joint housing, ball hub, ball cage and balls for indentations (pitting) and signs of seizure.

Note:

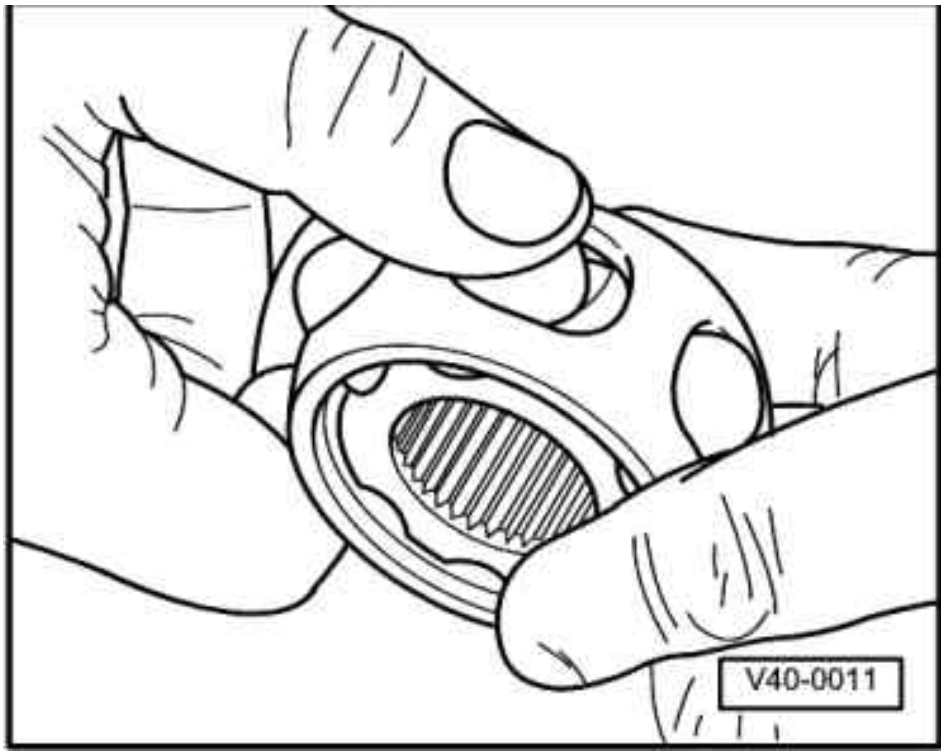

Excessive backlash in joint will be noticed as a knock during load changes. In such cases the joint must be renewed. Polished areas and ball track marks are not a reason for changing the joint.

satelettronica

Installing

- -> Insert ball hub over both chamfers into the ball cage. The hub can be installed in any position. Press balls into the cage.
- Insert hub with cage and balls at right angle to the joint.

Notes:

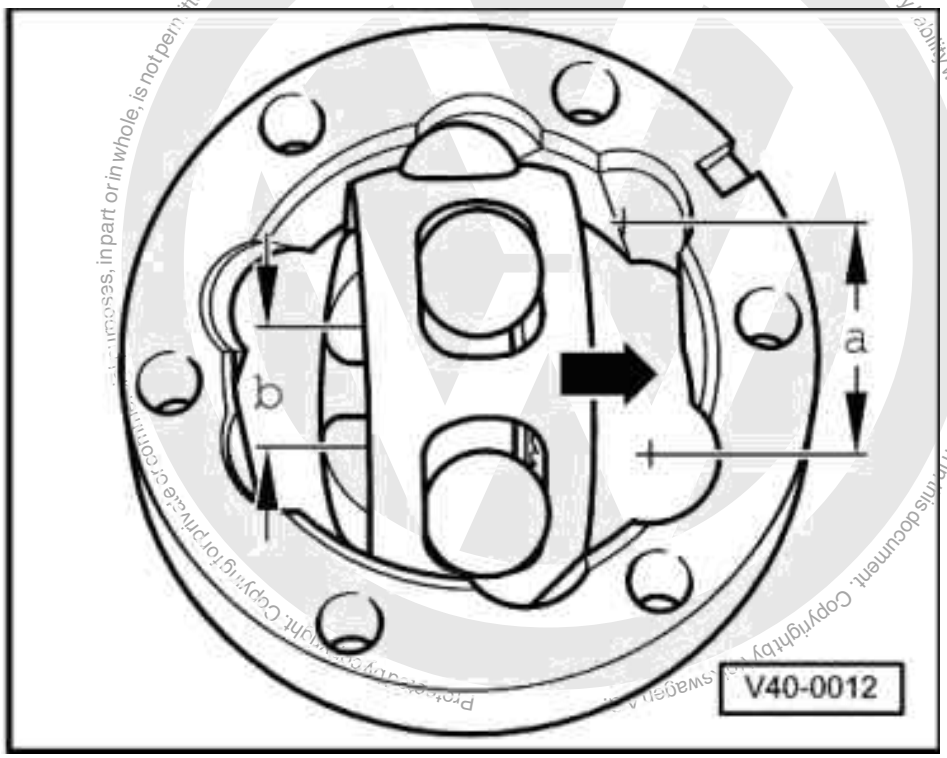

- -> When inserting ensure that the wide spacing -a- on joint housing is aligned with the narrow spacing -b- on the hub after swivelling in.
- Chamfer on inner diameter of ball hub (splines) must face larger diameter of joint housing.

satelettronica

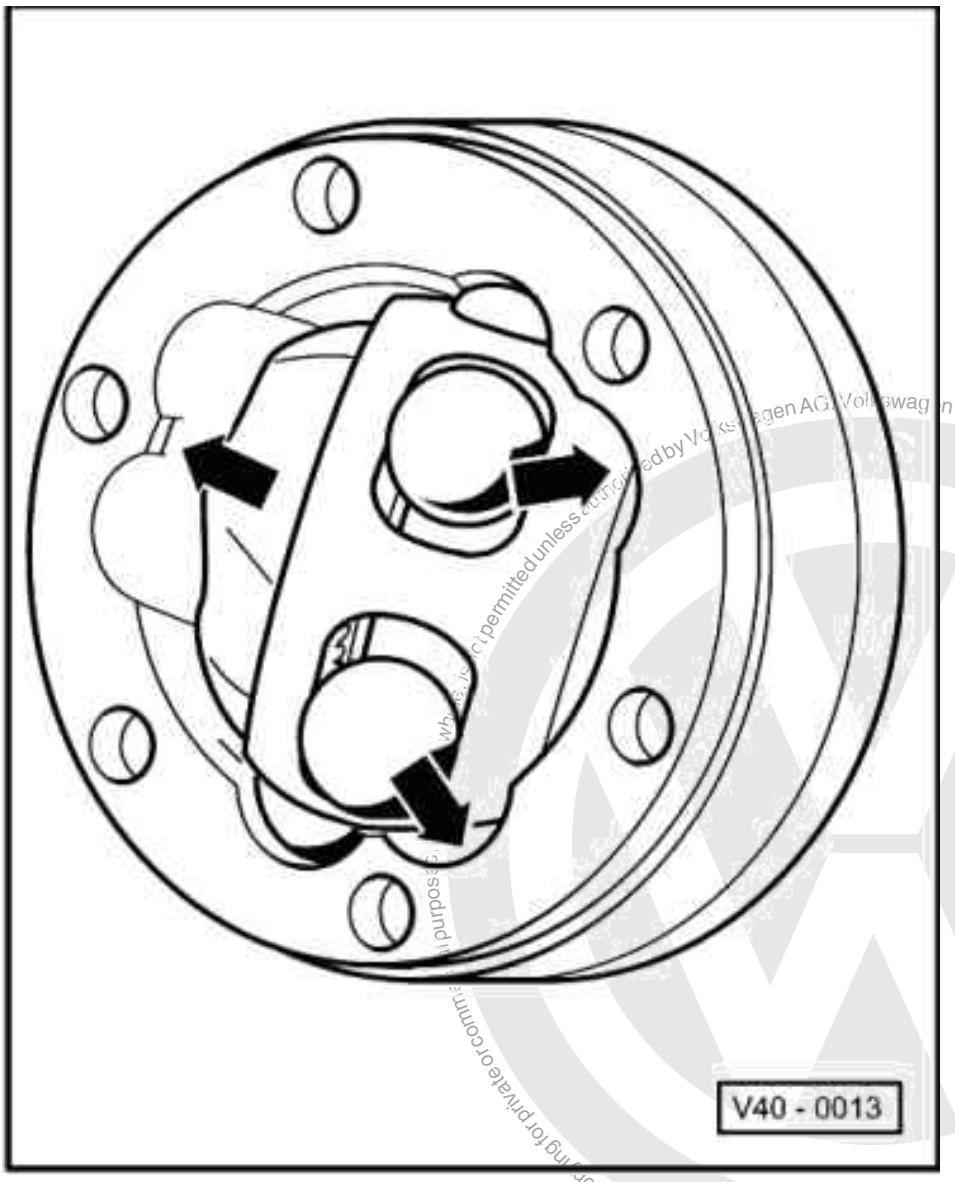

- -> Swivel in ball hub, whereby the hub must be swivelled out of the cage (arrows) far enough to allow the balls to fit into the ball tracks.

Protected by copyright. Copying for private or commercial purposes, in whole or in part, is not permitted unless authorised by Volkswagen AG. Volkswagen AG does not guarantee or accept any liability with respect to the correctness of information in this document. Copyright by Volkswagen AG.
satelettronica

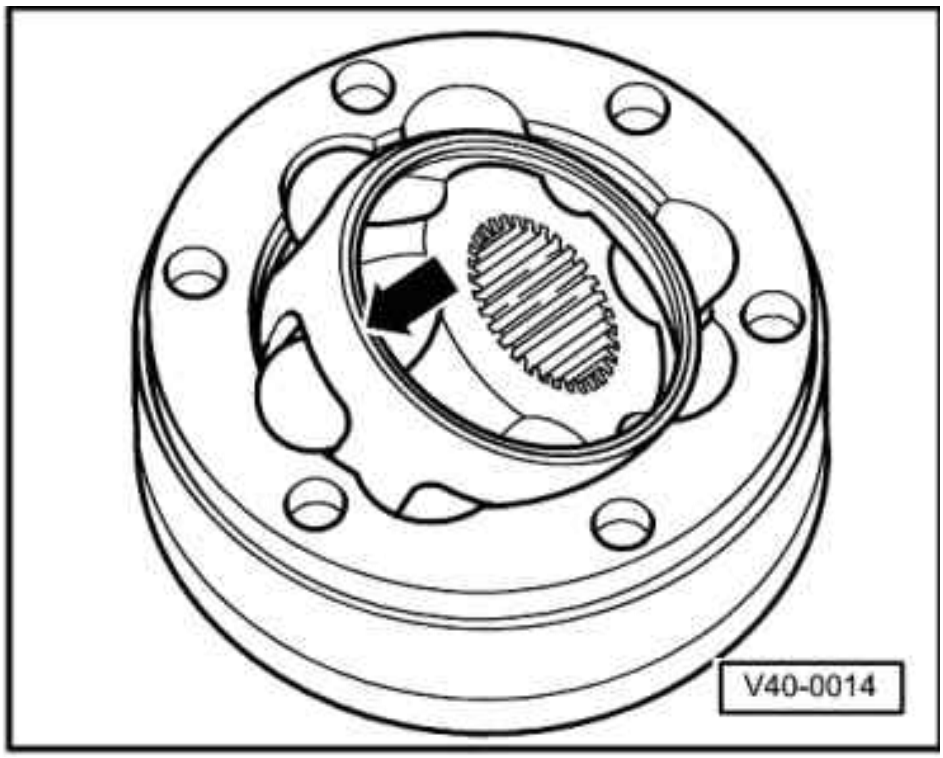

- -> Swivel in the hub with balls by applying firm pressure on the cage (arrow).

Checking operation of constant velocity joint:

The constant velocity joint is correctly assembled when the ball hub can be moved by hand backwards and forwards over its entire axial movement range.

Protected by copyright. Copying for private or commercial purposes, in part or in whole, is not permitted unless authorised by Volkswagen AG. Volkswagen AG does not guarantee or accept any liability with respect to the correctness of information in this document. Copyright by Volkswagen AG.

satelettronica

2.6 - V - Repairing drive shaft with tripod joint

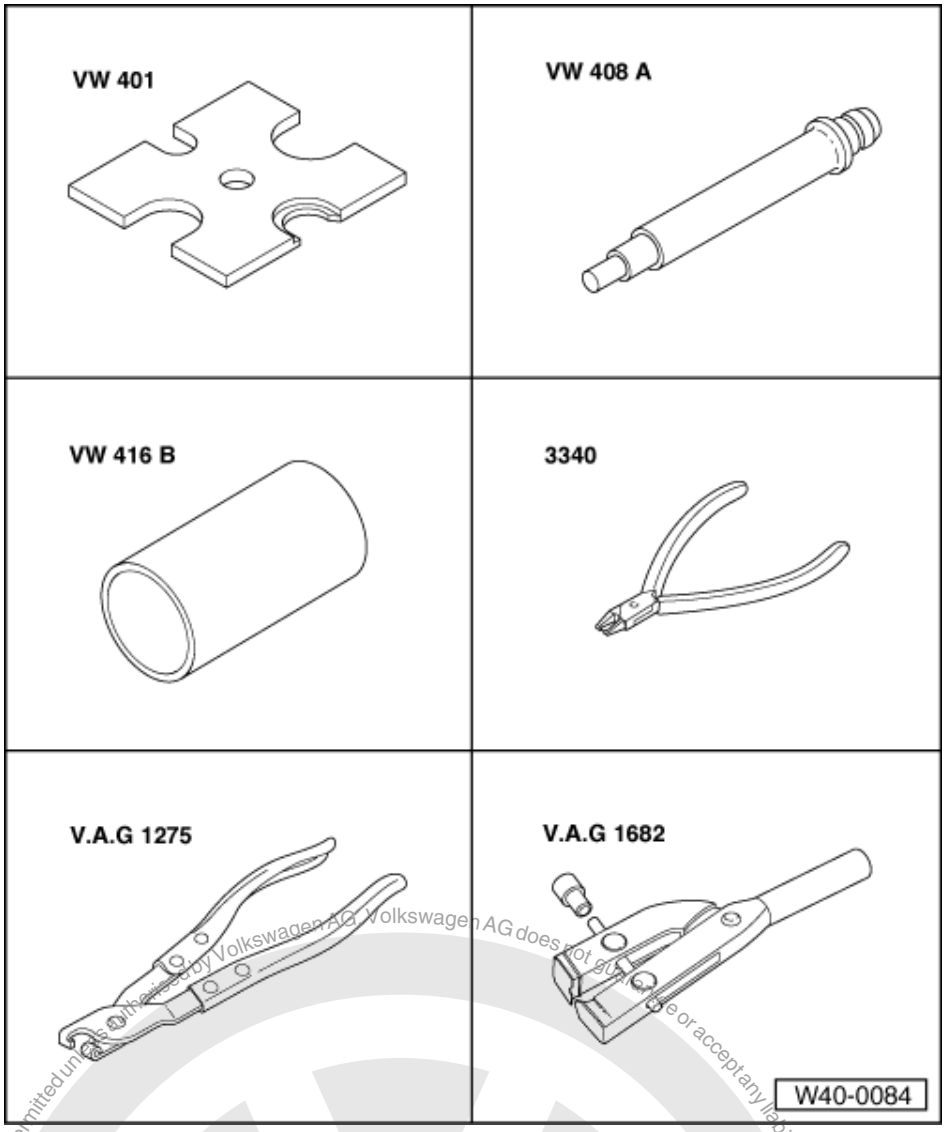

Special tools and workshop equipment required

- VW 401 Press plate
- VW 408 A Press tool
- VW 416 B Tube
- 3340 Pliers
- V.A.G 1275 Pliers
- V.A.G 1682 Clamp

Protected by copyright. Copying for private or commercial purposes, in part or in whole, is not permitted unless authorised by Volkswagen AG. Volkswagen AG does not guarantee or accept any liability with respect to the correctness of information in this document. Copyright by Volkswagen AG.
satelettronica

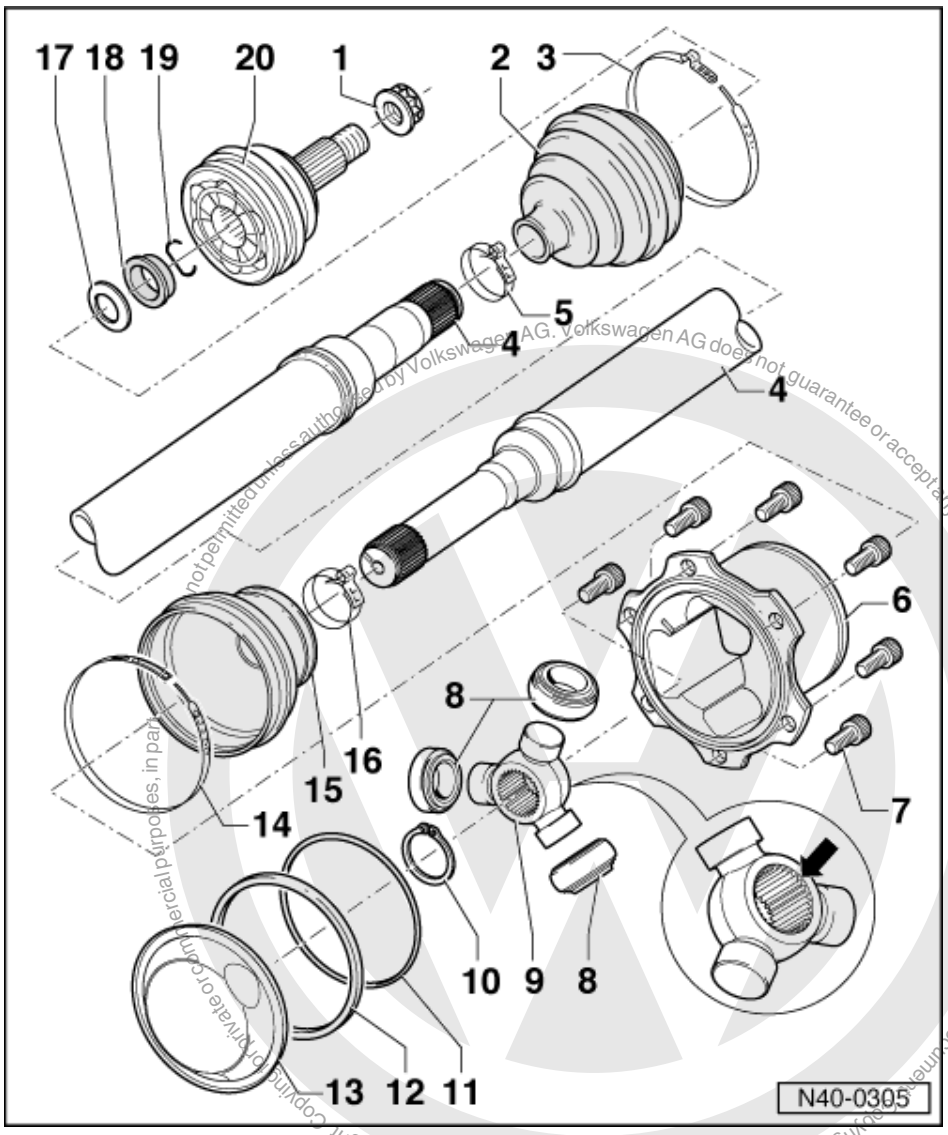

1 Self-locking hexagon nut, 265 Nm
- Any paint residue and/or corrosion on thread of the outer joint must be removed before the nut is fitted.
- Renew each time after removing

2 Constant velocity joint bellows
- Check for tears and chafing

3 Hose clip
- Renew
- Tensioning => Page 67

4 Drive shaft
- Allocation

=> Replacement parts catalogue

5 Hose clip
- Renew
- Tensioning => Page 68

satelettronica

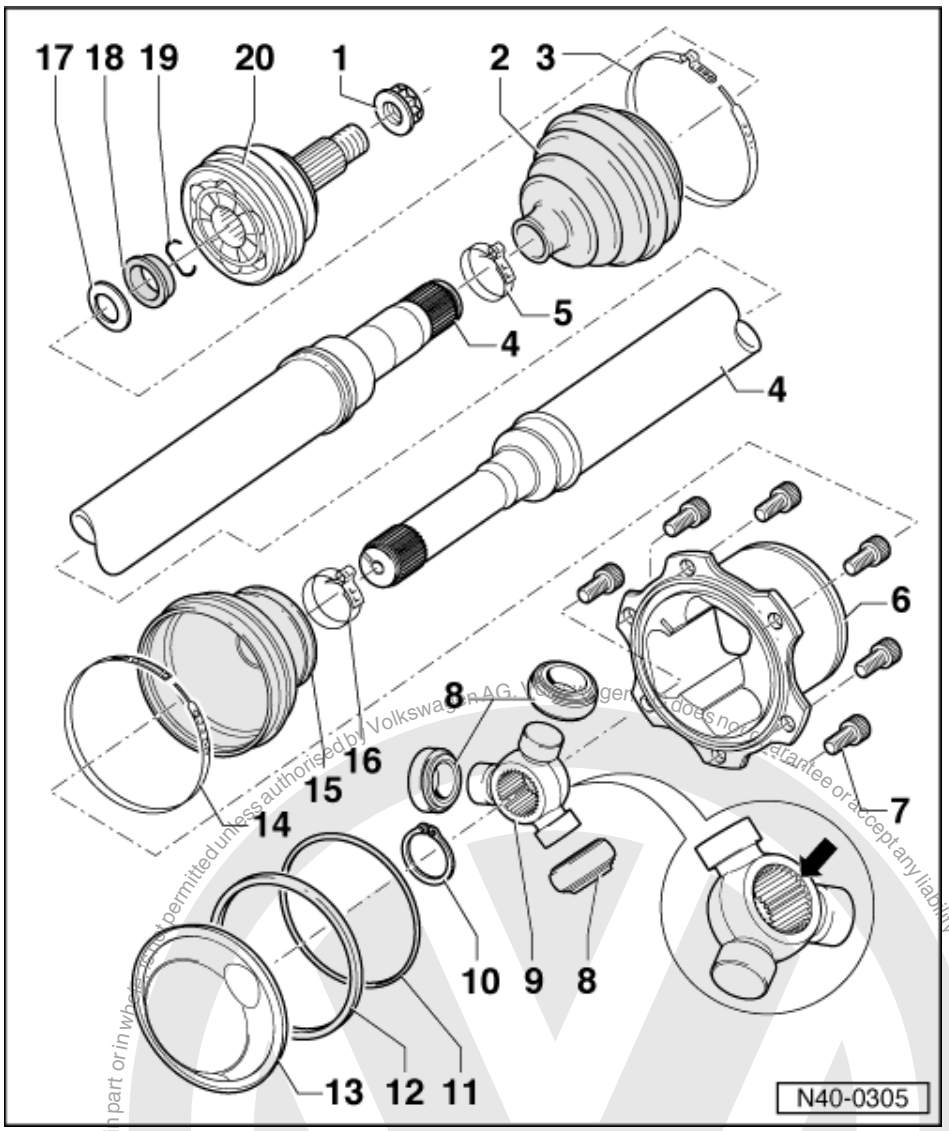

6 Joint piece

7 Multi-point socket head bolt
- M 8 x 18; 40 Nm

8 Rollers

9 Tripodic star

The chamfer -arrow- points to drive shaft splines.

10 Circlip
- Renew
- Insert in shaft groove

11 Seal

Is no longer required for assembly.

12 Rectangular section seal

This oil seal is part of the repair set. It is not installed during manufacture.

13 Cover

Destroyed when dismantling.
No longer required when assembling and is therefore no longer supplied as a spare part.

satelettronica

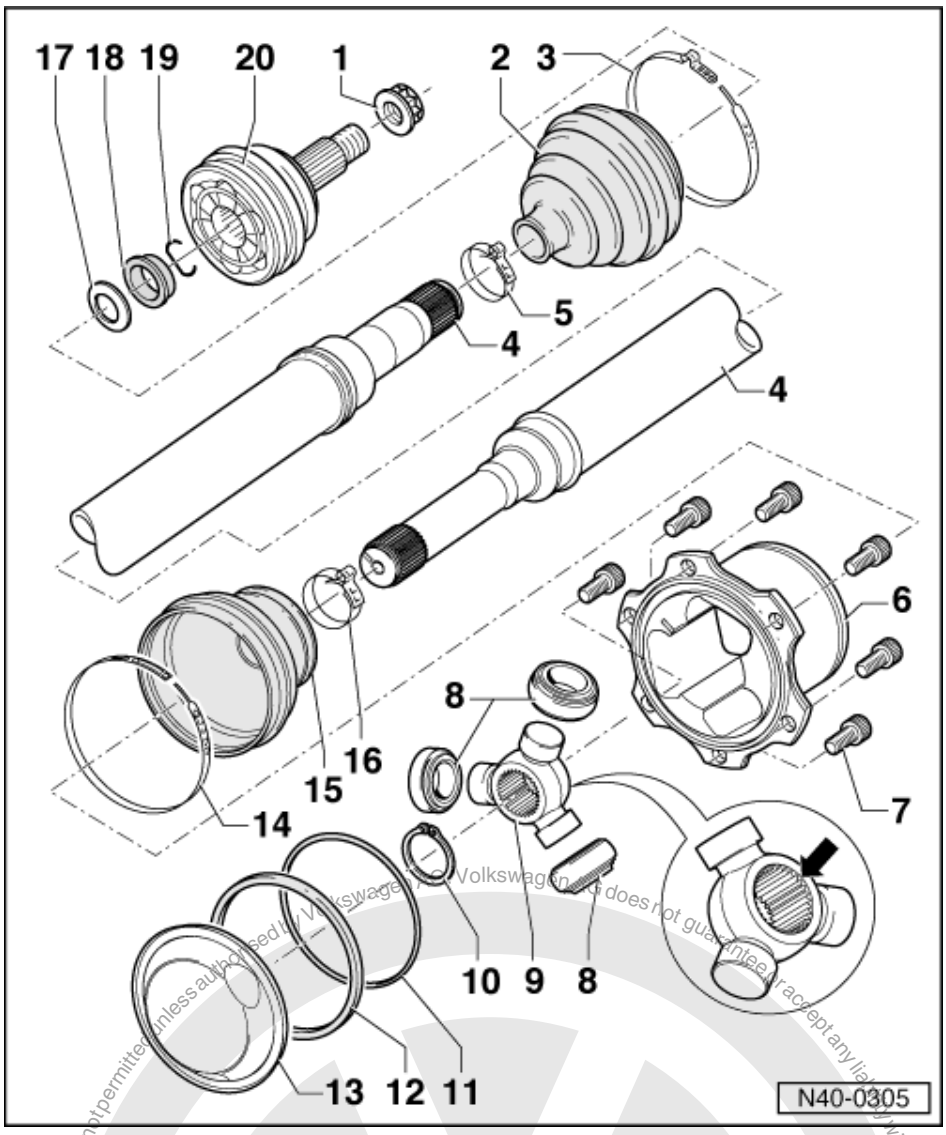

14 Hose clamp
- For tripodic joint
- Only fitted to left side on production vehicles

15 Triple roller joint bellows

16 Hose clip

17 Dished washer
- Installation position => Fig. 1

18 Thrust washer
- Installation position => Fig. 2

19 Circlip
- Renew
- Insert in shaft groove

20 Outer constant velocity joint
- Only renew complete
- Removing =>Page 69
- Installing: drive onto shaft with plastic hammer until compressed circlip seats
- Greasing => Page 60
- Checking => Page 70

satelettronica

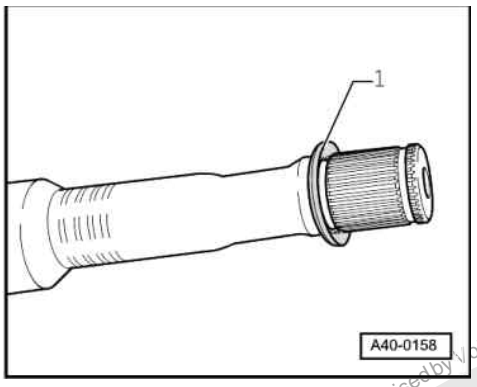

-> Fig.1 Installation position of dished washer on inner joint

1 - Dished washer

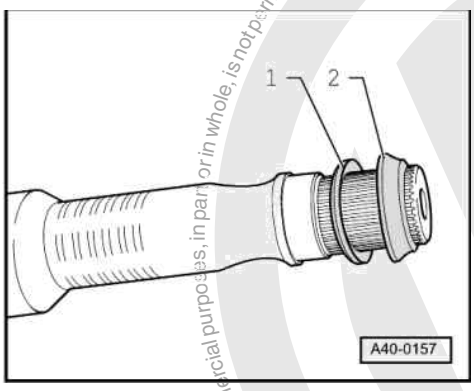

-> Fig.2 Installation position of dished washer and thrust washer on outer joint

1 - Dished washer
2 - Thrust washer

2.7 - Dismantling and assembling triple roller joint

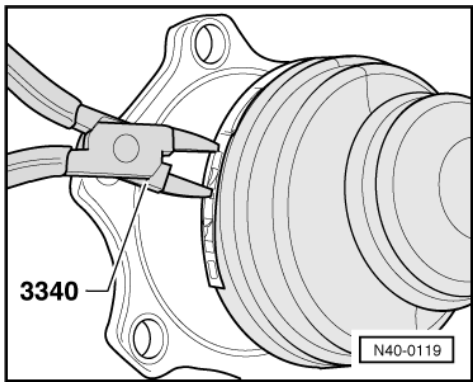

Dismantling

- -> Open hose clamp.
- Open clamp on shaft and slide back joint protective bellows.

Protected by copyright. Copying for private or commercial purposes, in part or in whole, is not permitted unless authorised by Volkswagen AG. Volkswagen AG does not guarantee or accept any liability with respect to the correctness of information in this document. Copyright by Volkswagen AG.
satelettronica

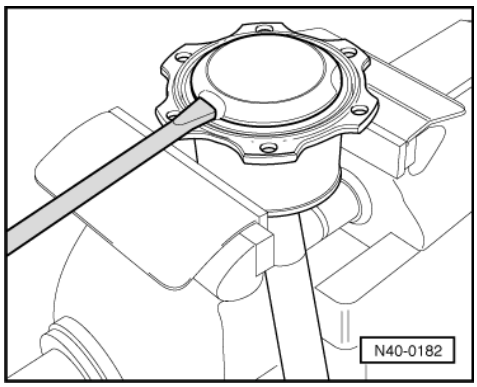

- -> Drive screwdriver or similar into cover and lever off cover.

  If the cover cannot be levered off, we recommend that a screwdriver is driven in again on the opposite side, then lever off cover.

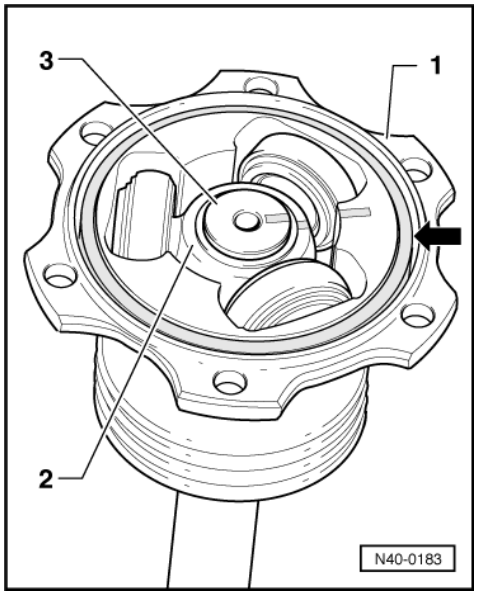

- -> Mark installation position of parts 1 . . . 3.

If the parts are not marked and when assembling, the components are not brought back to their previous installation position then it is possible that it will be noisy when driving.

A waterproof felt tipped pen is suitable for marking.

- Take rubber ring -arrow- out of groove.

  1 - Joint
  2 - Triple roller star
  3 - Drive shaft

- Hold joint and take drive shaft out of vice.

  Ensure that the rollers do not slide off the triple roller star and fall on the ground!

- Hold drive shaft and joint horizontal and using the other hand slowly slide joint back.

Protected by copyright. Copying for private or commercial purposes, in part or in whole, is not permitted unless authorised by Volkswagen AG. Volkswagen AG does not guarantee or accept any liability with respect to the correctness of information in this document. Copyright by Volkswagen AG.
satelettronica

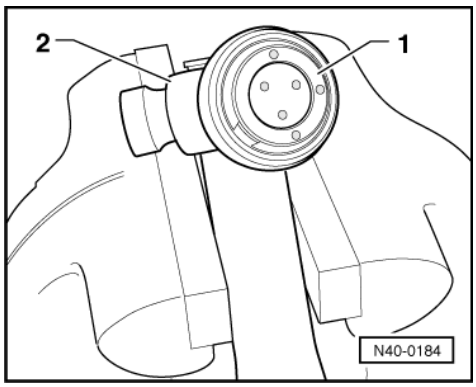

- -> Mark installation position of rollers -1- to triple roller star -2- using a felt tipped pen.
- Take off rollers -1- and place on a clean surface.

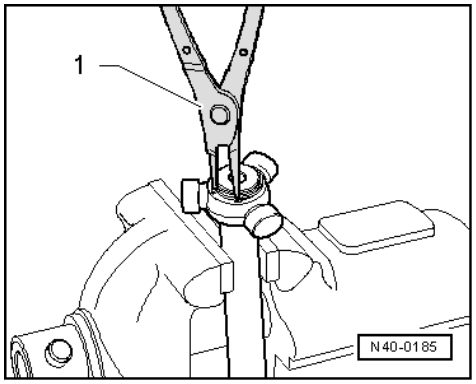

- -> Remove circlip.

  1 - Pliers (commercial type)

- Insert drive shaft in press.

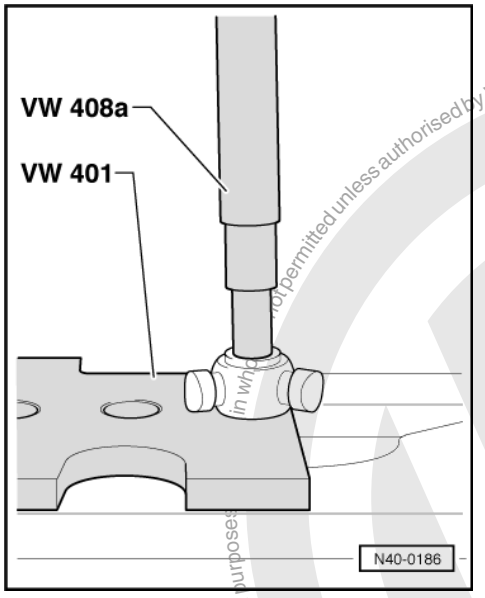

- -> Hold drive shaft, then press triple roller star off drive shaft.
- Pull joint with joint protective bellow off shaft.
- Clean shaft and housing.

Assembling
- Slide small clamp for joint protective bellows onto shaft.
- Slide joint protective bellows onto shaft.

satelettronica
Copyright by Volkswagen AG. Volkswagen AG does not guarantee or accept any liability with respect to the correctness of information in this document. Copying for private or commercial purposes, in whole or in part, is not permitted unless authorised by Volkswagen AG.
Protected by copyright. Copying for private or commercial purposes, in whole or in part, is not permitted unless authorised by Volkswagen AG.

- Slide joint onto shaft.

Assembling triple roller star

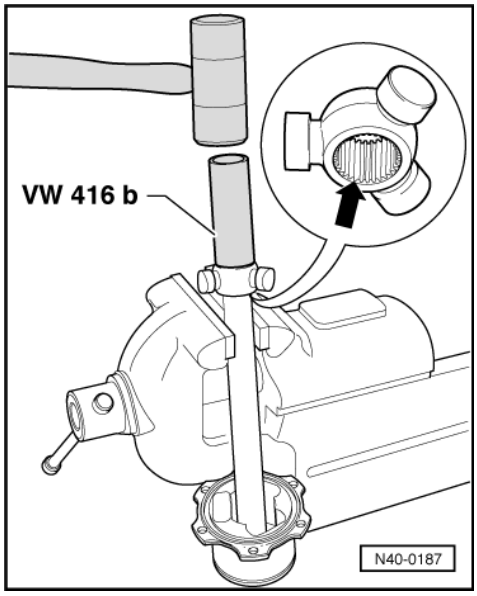

The chamfer -arrow- on star faces towards shaft, this is used as an assembly aid.

- -> Fit tripodic star onto shaft as per markings and drive onto stop.
- Insert circlip, ensure seated correctly.
- Fit rollers onto triple roller star as per markings.
- Slide joint over rollers and hold.

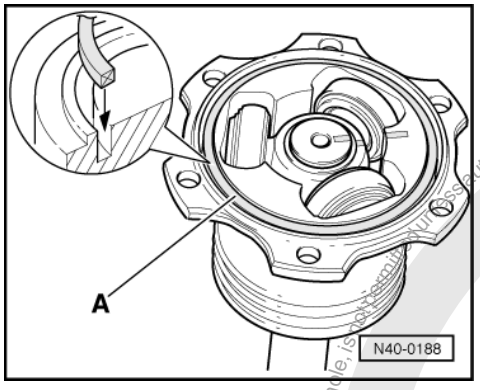

- Now take drive shaft out of vice and tension joint in vice.
- -> Insert rectangular section seal -arrow- from repair set into groove.

The rectangular profile of the seal seals the triple roller joint and joint flange directly.

Therefore no cover is required!

- Press 90 grammes of joint grease, from repair set, into triple roller joint.
- Press 90 grammes of joint grease, from repair set, into the reverse side of the triple roller joint.

satelettronica
Protected by copyright. Copying for private or commercial purposes, in part or in whole, is only permitted with the express authorised by Volkswagen AG. Volkswagen AG does not guarantee or accept any liability with respect to the correctness of information in this document. Copyright by Volkswagen AG.

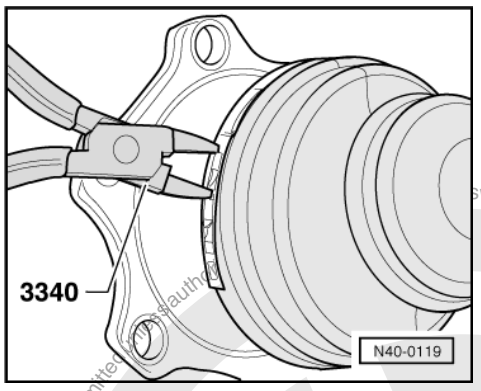

- Fit joint protective bellows.
- -> Fit hose clip.

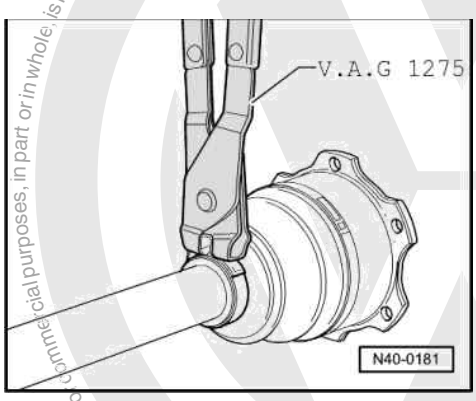

- -> Tension small hose clamp with pliers V.A.G 1275.

Precautions when installing!

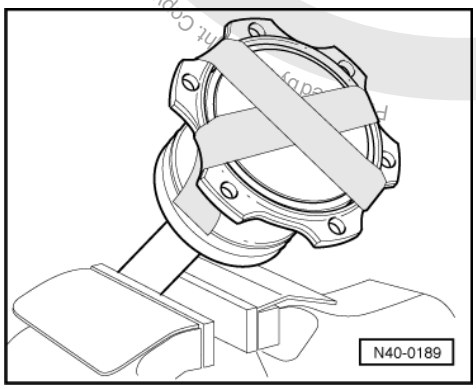

-> To prevent the tripodic joint from being pushed back unintentionally when installing the drive shaft, secure triple roller joint with adhesive tape.

Remove adhesive tape just before bolting to drive flange.

swagen AG does not guarantee or accept any liability with respect to the correctness of information in this document. Copyright by Volkswagen AG.
commercial purposes, in part or in whole, is not permitted unauthorized
satelettronica

42 - Rear suspension

1 - Servicing rear axle, Caddy

1.1 - Servicing rear axle, Caddy

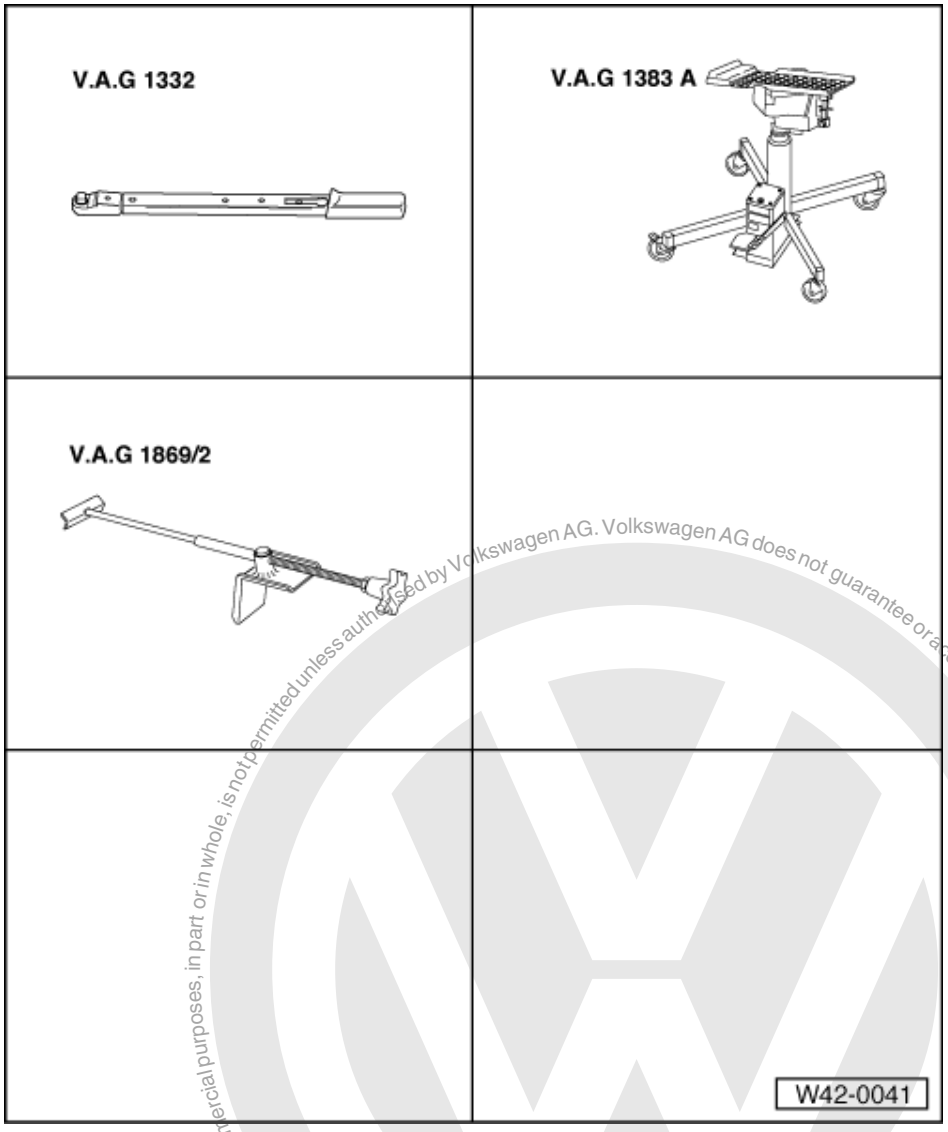

1.2 - Removing and installing rear axle, Caddy

Special tools and workshop equipment required

- V.A.G 1332 Torque wrench
- V.A.G 1383 A Engine/gearbox jack
- V.A.G 1869/2 Brake pedal depressor

Protected by copyright. Copying for private or commercial purposes, in part or in whole, is not permitted unless authorised by Volkswagen AG. Volkswagen AG does not guarantee or accept any liability with respect to the correctness of information in this document. Copyright by Volkswagen AG.
satelettronica

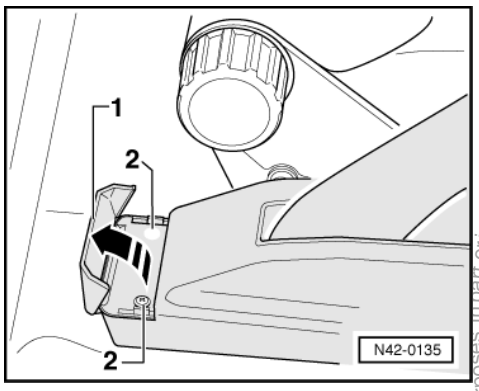

Removing

- -> Unclip cover cap -1-.
- Remove cross-head screw -2- (Qty. 2).
- Pull off handbrake lever trim.

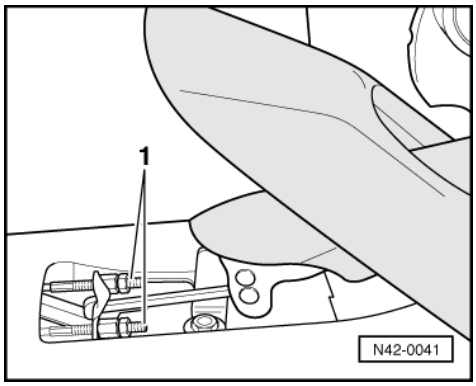

- -> Disconnect handbrake cables -1- from handbrake lever.
- Fit brake pedal loading device V.A.G 1869/2.

This will prevent the brake fluid draining from the brake pipes and the ABS hydraulic unit!

- Remove wheels.

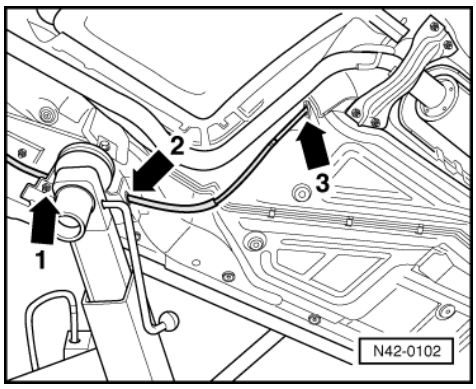

- -> Remove retainer for handbrake cable (arrow 1).
- Pull handbrake cables out of guide tubes (arrows 2 and 3).
- Place engine/gearbox jack V.A.G 1383 A in position.

Protected by copyright. Copying for private or commercial purposes, in part or in whole, is not permitted unless authorised by Volkswagen AG. Volkswagen AG does not guarantee or accept any liability with respect to the correctness of information in this document. Copyright by Volkswagen AG.
satelettronica

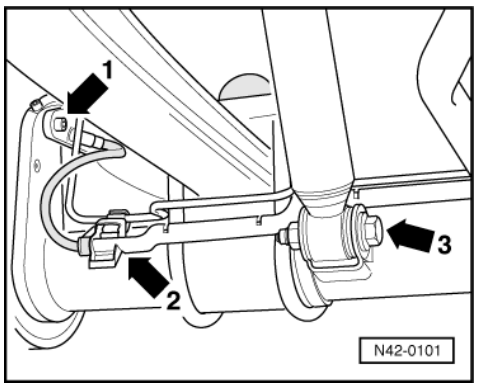

- -> Remove speed sensor (arrow 1) and unclip from the retainer (arrow 2) (only on vehicles fitted with ABS).
- Disconnect shock absorber (arrow 3) from rear axle.

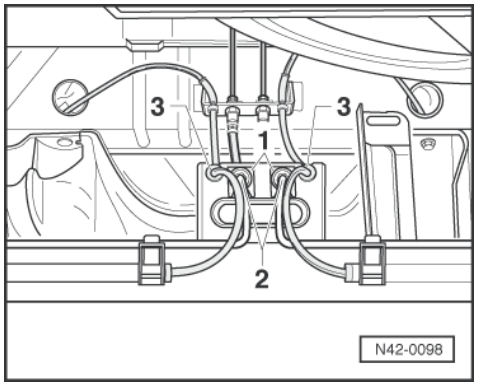

- -> Remove retaining clamps -1-.
- Disconnect brake pipes -2-.
- If fitted, unclip sensor wires for ABS -3-.

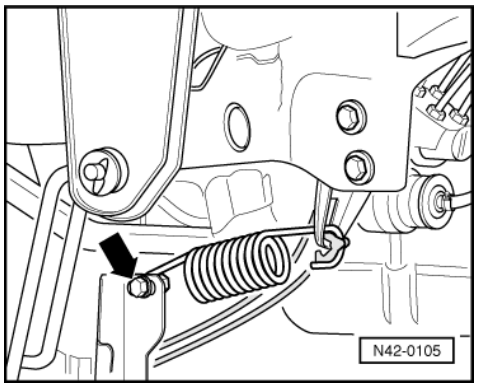

On vehicles without ABS:

- -> Remove the nut and bolt (arrow) which is securing the brake pressure regulator spring to the axle. Mark installation position.

Protected by copyright. Copying for private or commercial purposes, in part or in whole, is not permitted unless authorised by Volkswagen AG. Volkswagen AG does not guarantee or accept any liability with respect to the correctness of information in this document. Copyright by Volkswagen AG.
satelettronica

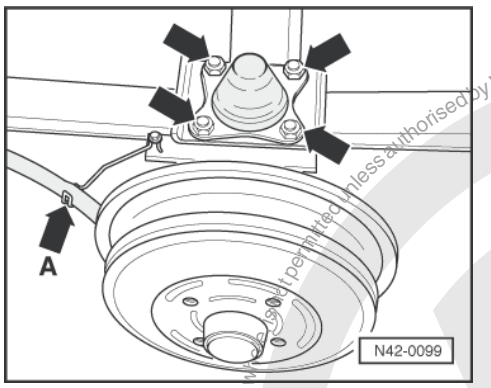

- -> Detach handbrake cables from the retainers (arrow A).
- Remove the nuts (arrows) securing the "U" bolts.

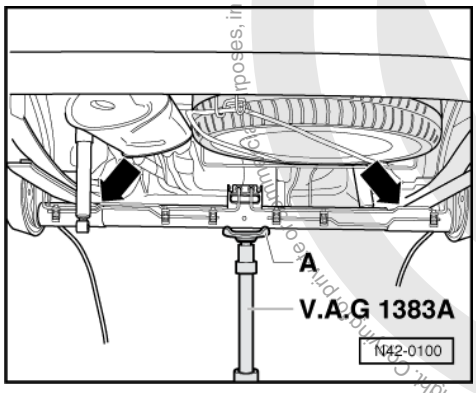

- -> Lower rear axle using engine/gearbox jack V.A.G 1383 A.
- If necessary lever leaf spring centralizing pins out of the rear axle (arrows).

Installing

Install in reverse order.

- Bleeding brake system

=> Brake systems; repair group 47 Booklet, Bleeding brake system, vehicles with or without ABS

Tightening torques:	
Shock absorber to rear axle	100 Nm
Axle beam to leaf spring	100 Nm

Protected by copyright. Copying for private or commercial purposes, in part or in whole, is not permitted unless authorised by Volkswagen AG. Volkswagen AG does not guarantee or accept any liability with respect to the correctness of information in this document. Copyright by Volkswagen AG.
satelettronica

1.3 - Assembly overview rear axle (Caddy)

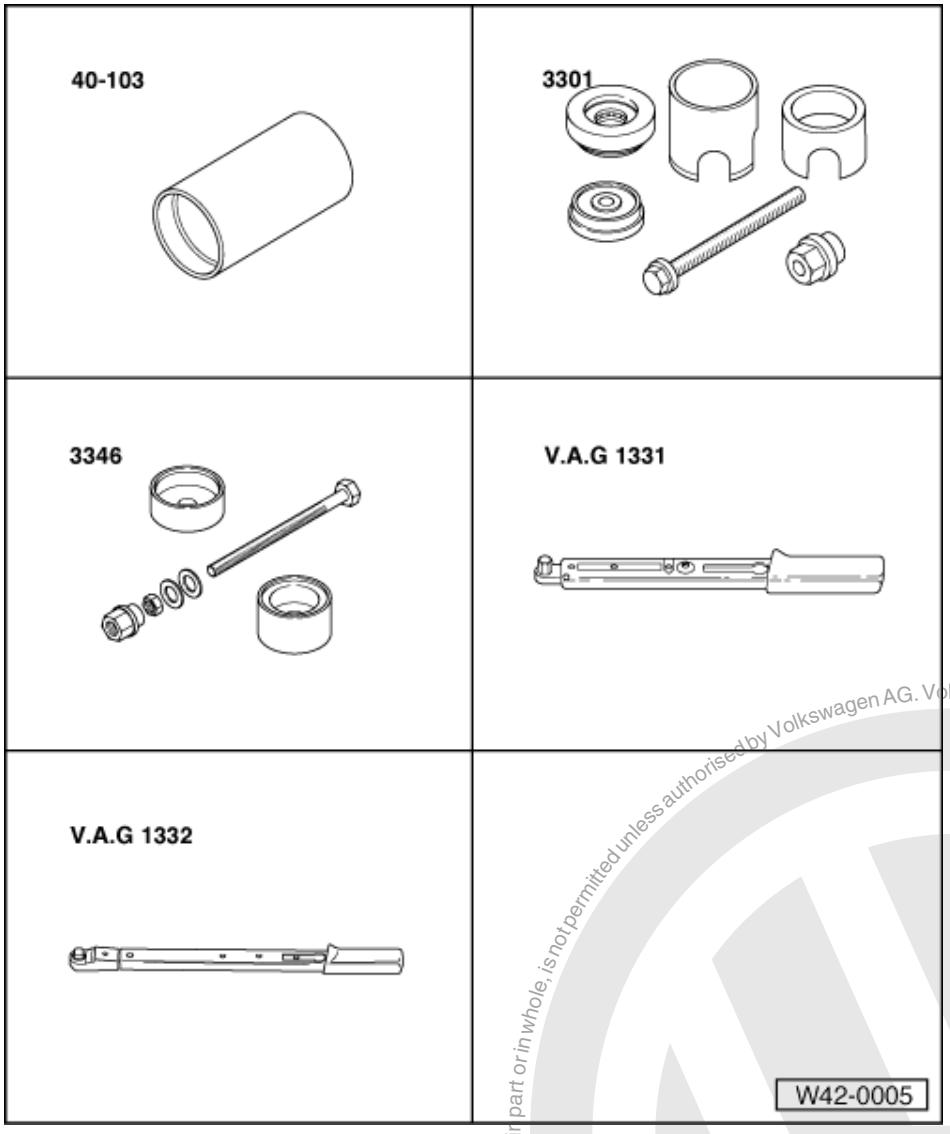

Special tools and workshop equipment required

- 40-103 Support
- 3301 Assembly tool
- 3346 Assembly tool
- V.A.G 1331 Torque wrench
- V.A.G 1332 Torque wrench

Protected by copyright. Copying for private or commercial purposes, in part or in whole, is not permitted unless authorised by Volkswagen AG. Volkswagen AG does not guarantee or accept any liability with respect to the correctness of information in this document. Copyright by Volkswagen AG.
satelettronica

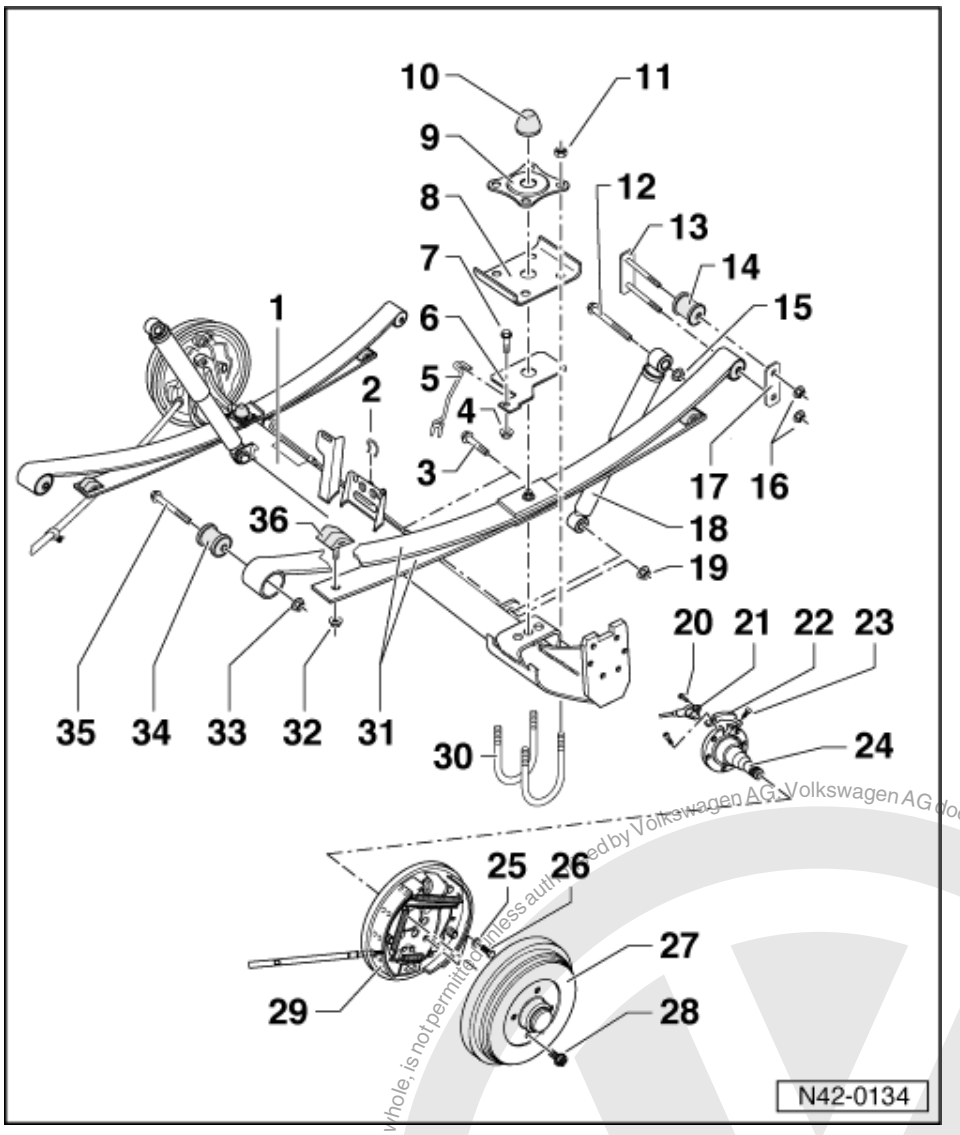

Note:

Welding and straightening on axle beam and stub axle is not permissible.

1 Axle beam
- Stub axle contact surfaces and threaded holes are to be free of paint and dirt

2 Retaining clip
- For brake pipes

3 Bolt
4 Hexagon nut
5 Handbrake cable bracket
6 Intermediate plate
- Allocation

=> Replacement parts catalogue

7 Bolt
8 Spring retaining plate

Protected by copyright. Copying for private or commercial purposes, in part or in whole, is not permitted unless authorised by Volkswagen AG. Volkswagen AG does not guarantee or accept any liability with respect to the correctness of information in this document. Copyright by Volkswagen AG.
satelettronica

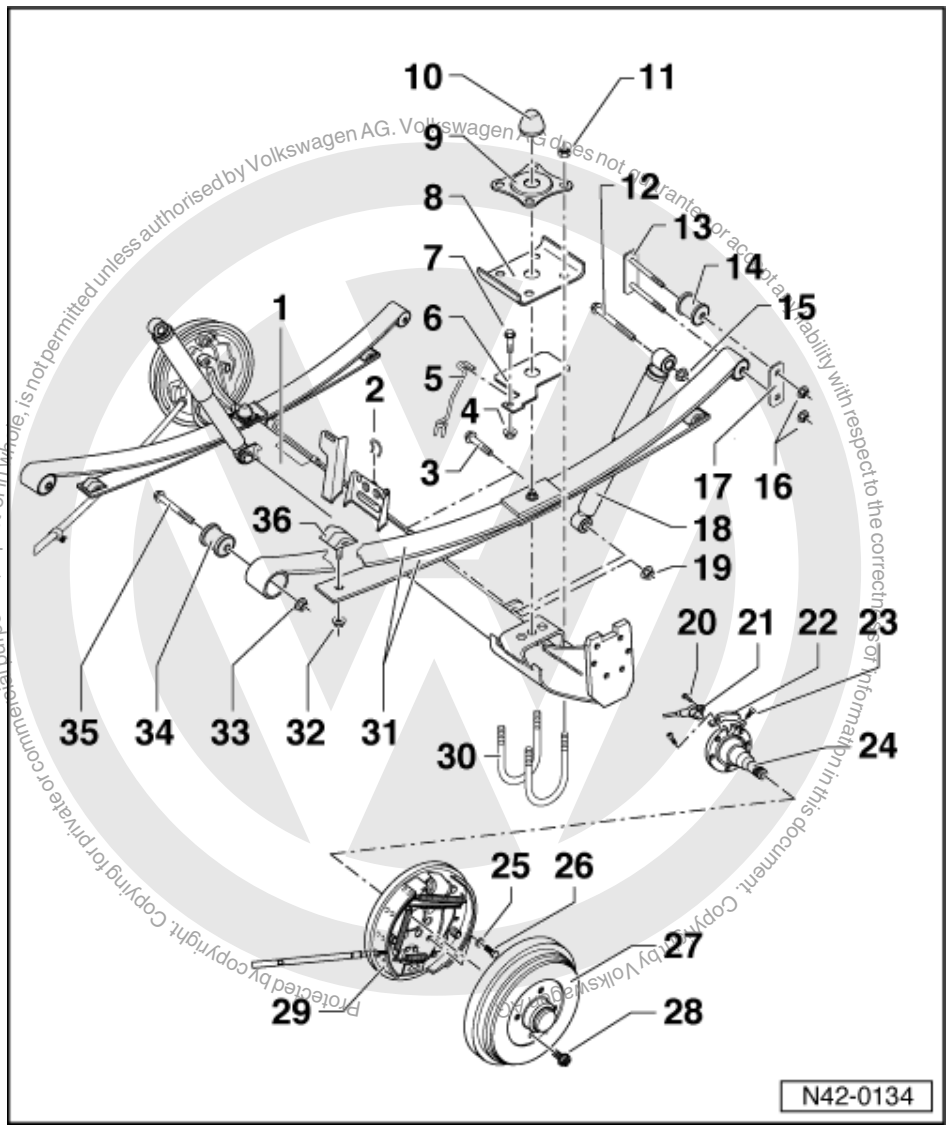

9 Bump stop plate
10 Stop buffer
11 Self-locking nut, 100 Nm
12 Bolt
13 Shackle plate
- With bolts welded onto it

14 Bonded rubber mounting
- In longitudinal member
- Pulling out and in => Fig. 1

15 Nut, 100 Nm
16 Nut, 100 Nm
17 Shackle plate
- Allocation

=> Replacement parts catalogue

satelettronica

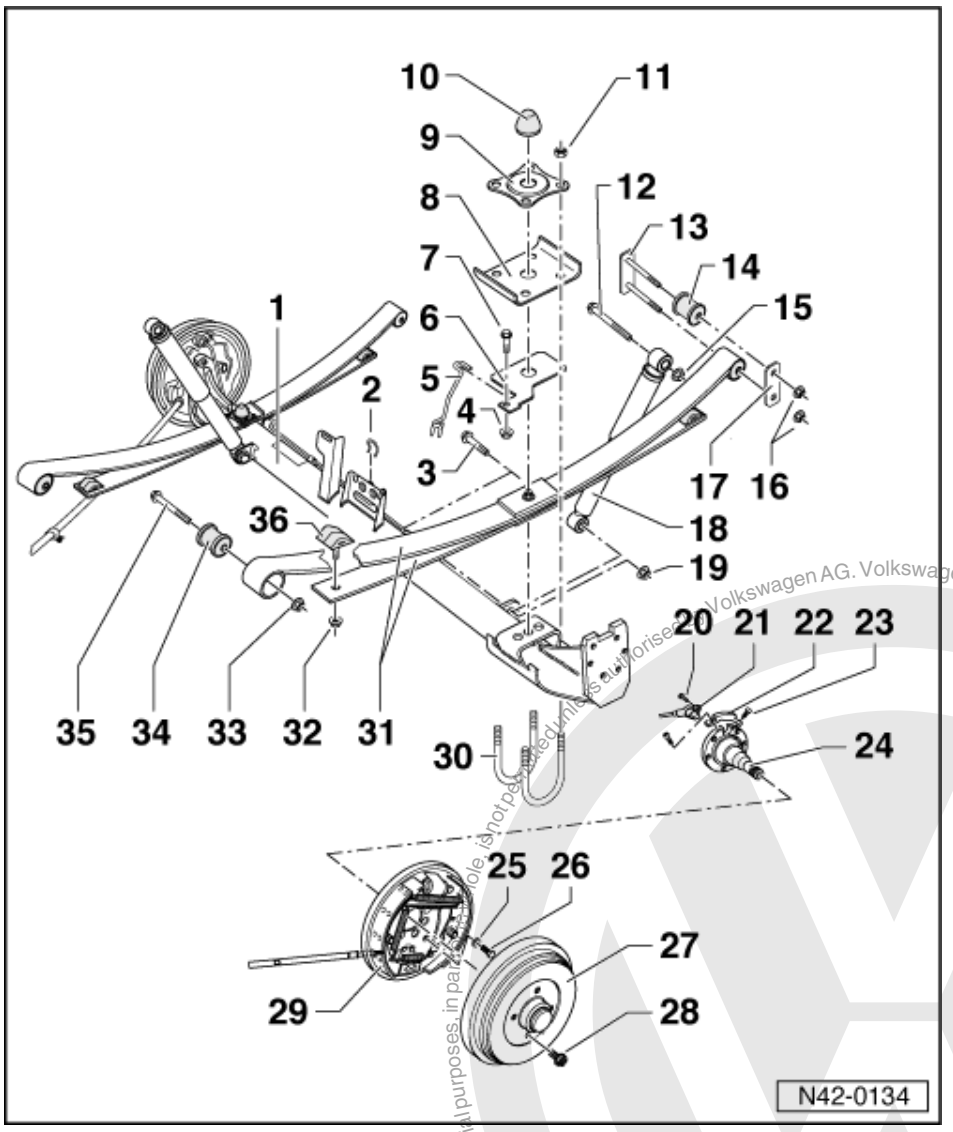

18 Shock absorber

- Can be renewed individually
- Removing and installing
- Allocation

=> Replacement parts catalogue

- Disposal

=> Special information; Running gear No.2; Environmentally acceptable and economical disposal of oil-filled components

- Checking shock absorber for leaks and noises

=> Special information; Running gear No.17; Leaking shock absorbers, noisy shock absorbers

19 Nut, 100 Nm

20 Hexagon socket head bolt, 10Nm

21 Speed sensor

- Only on vehicles with ABS

22 Bracket

23 Socket head bolt

Protected by copyright. Copying for private or commercial purposes, in part or whole, is not permitted unless authorised by Volkswagen AG. Volkswagen AG does not guarantee or accept any liability with respect to the correctness of information in this document. Copyright by Volkswagen AG.
satelettronica

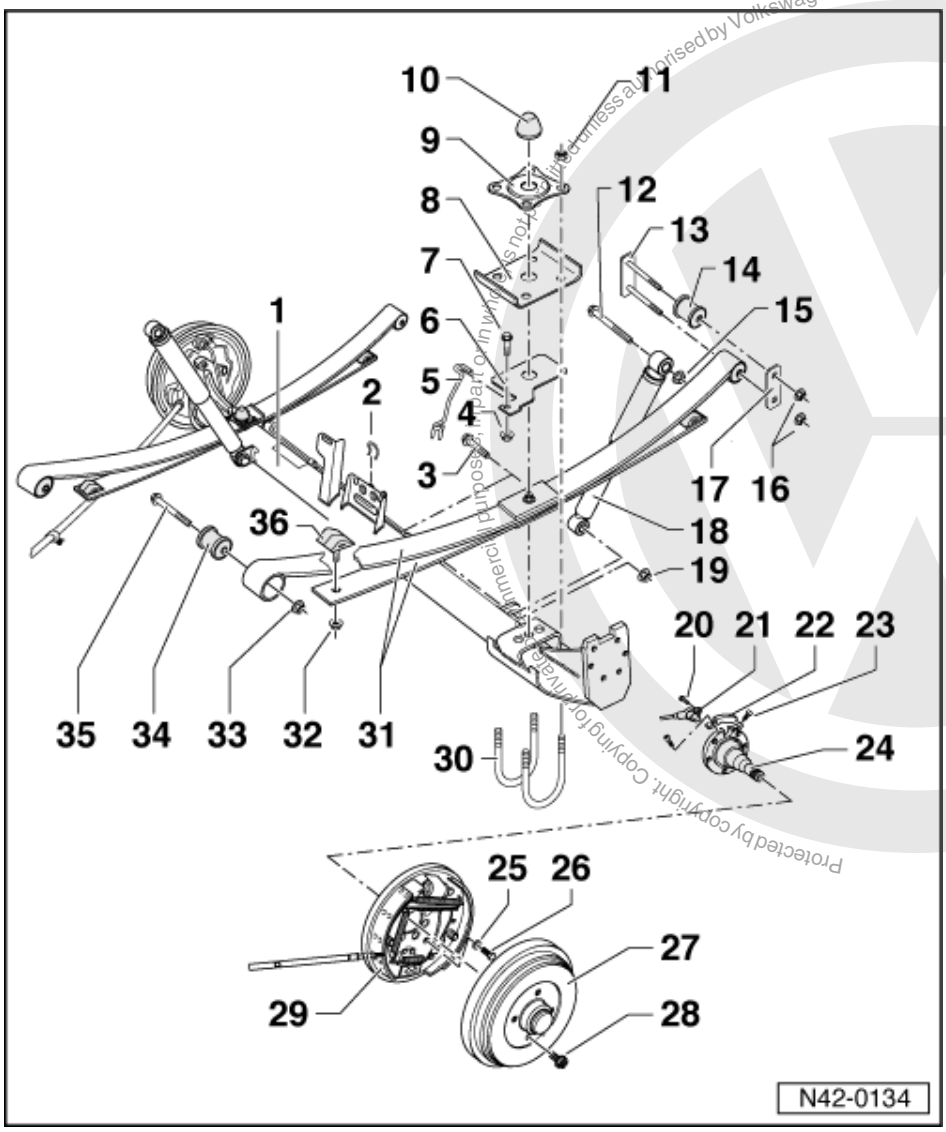

24 Stub axle
- Straightening operations are not permitted!
- Allocation

=> Replacement parts catalogue

25 Dished washer
- Larger contact surface (concave side) to brake backplate

26 Hexagon bolt, 40 Nm

27 Brake drum
- Before removing release brake shoe adjustment through wheel bolt hole => Fig. 5
- For vehicles through vehicle No. 9K Y Y 500 748, fill hub with multi-purpose grease before installing
- Renew through vehicle No. 9K Y Y 500 748

28 Wheel bolt, 110 Nm

29 Brake backplate
- Bolt together with stub axle onto rear axle

Protected by copyright. Copying for private or commercial purposes, in part or in whole, is not permitted unless authorised by Volkswagen AG. Volkswagen AG does not guarantee or accept any liability with respect to the correctness of information in this document. Copyright by Volkswagen AG.
satelettronica

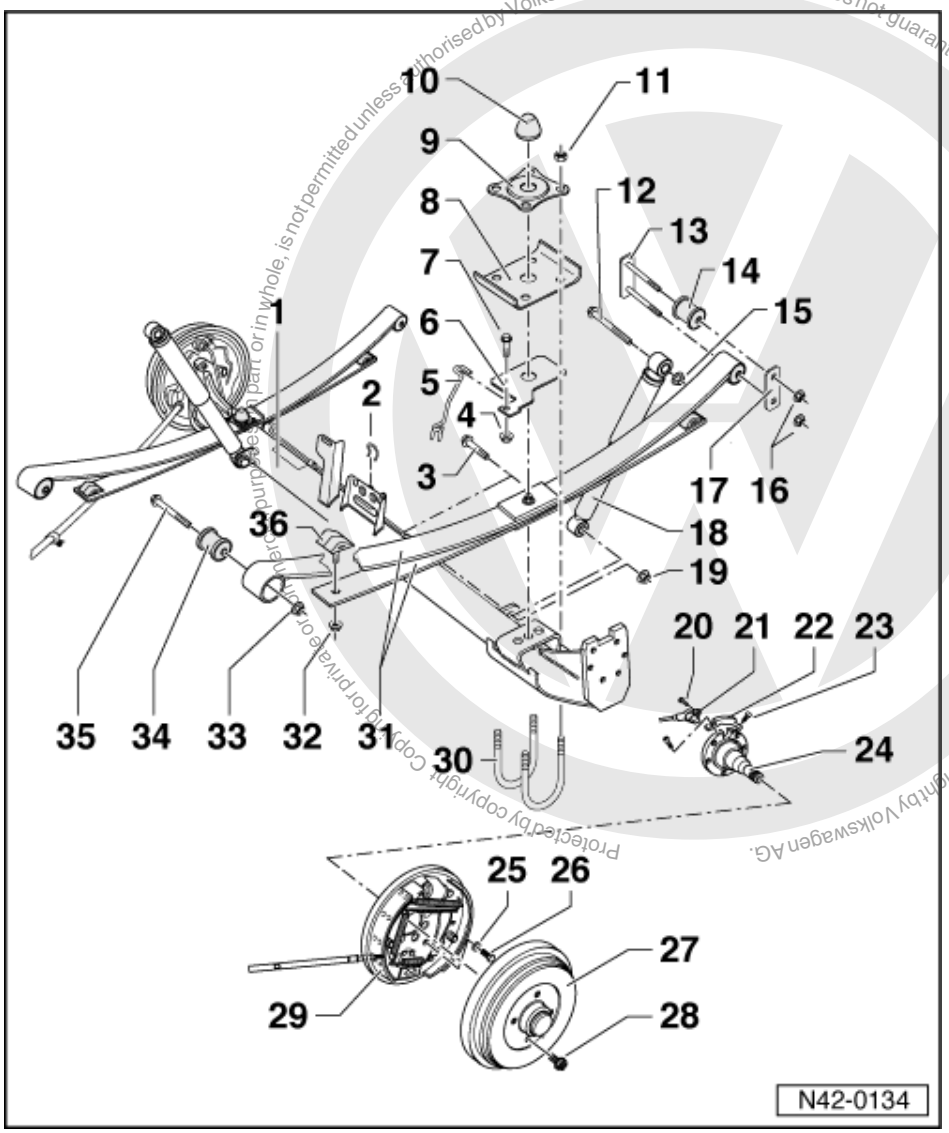

30 U bolt

31 Leaf springs

- Can be renewed individually
- Allocation

=> Replacement parts catalogue

- Removing and installing
  => Page 97

32 Hexagon nut

33 Nut, 100 Nm

34 Bonded rubber mounting

- For leaf spring
- Pulling out and in => Fig. 2

35 Bolt

36 Rubber support pad

- Note installation position
  => Fig. 3
- Allocation

satelettronica

=> Replacement parts catalogue

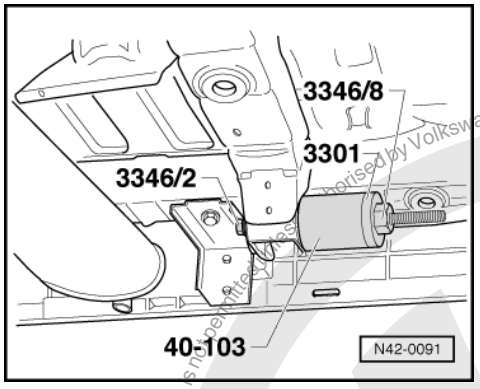

-> Fig.1 Pulling out and pulling in bonded rubber mounting in longitudinal member

Note:

Before pressing in coat with acid-free lubricant e.g. soft soap.

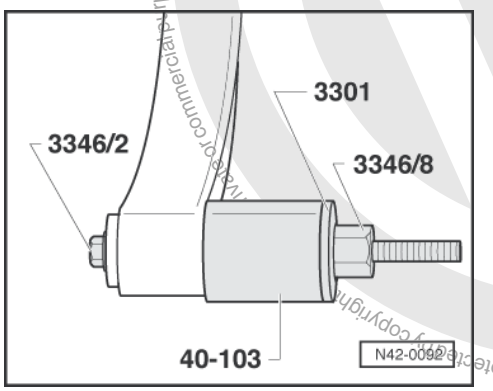

-> Fig.2 Pulling out and pulling in leaf spring bonded rubber mounting

Note:

Before pressing in coat with acid-free lubricant e.g. soft soap.

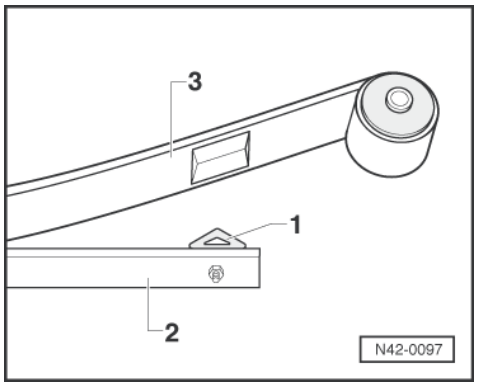

Protected by copyright. Copyright by Volkswagen AG. Volkswagen AG does not guarantee or accept any liability with respect to the correctness of information in this document. Copyright by Volkswagen AG.
satelettronica

-> Fig.3 Fitting position of rubber support pad

The rubber support pad -1- must be fitted to the support leaf -2- so that the apex lies at 90° to the longitudinal axis of the main leaf -3- (at right angles to the longitudinal axis of the leaf spring).

Note:

When assembling the leaf spring ensure that the main and support leafs are aligned otherwise the rubber support pad will prematurely.

1.4 - Removing and installing leaf spring, Caddy

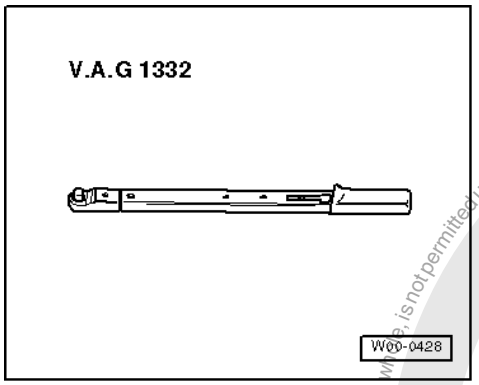

Special tools and workshop equipment required

- V.A.G 1332 Torque wrench

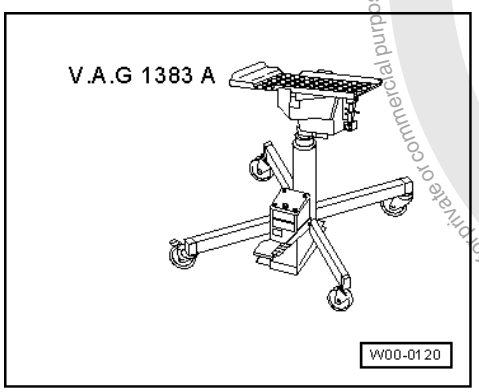

- V.A.G 1383 A Engine/gearbox jack

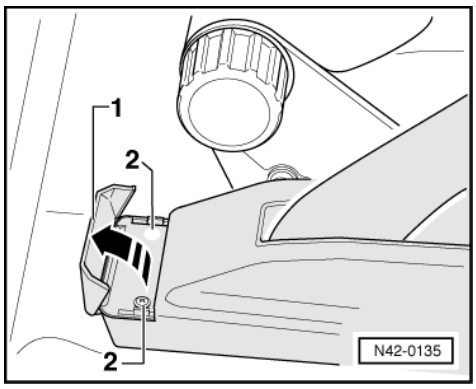

Protected by copyright. Copying for private or commercial purposes, in part or in whole, is not permitted unless authorised by Volkswagen AG. Volkswagen AG does not guarantee or accept any liability with respect to the correctness of information in this document. Copyright by Volkswagen AG.
satelettronica

Note:

It is possible to change the leaf springs individually without removing the rear axle.

Removing

- -> Unclip cover cap -1-.
- Remove cross-head screw -2- (Qty. 2).
- Pull off handbrake lever trim.

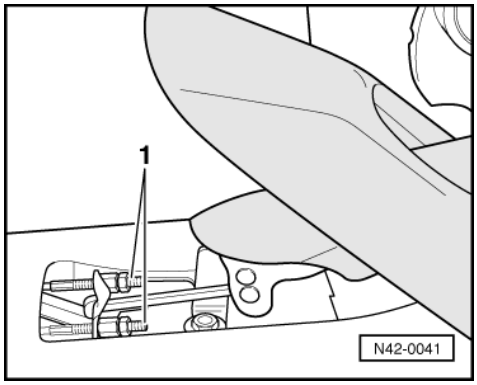

- -> Disconnect handbrake cables -1- from handbrake lever.
- Remove wheels.

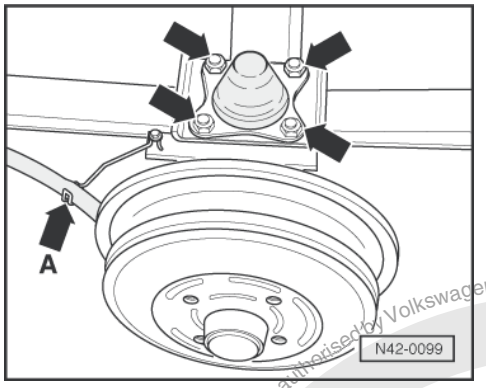

- Place gearbox jack V.A.G 1383 A under rear axle and support.
- -> Detach handbrake cables from the retainers (arrow A).
- Disconnect shock absorber from rear axle.
- Remove the nuts (arrows) securing the "U" bolts.

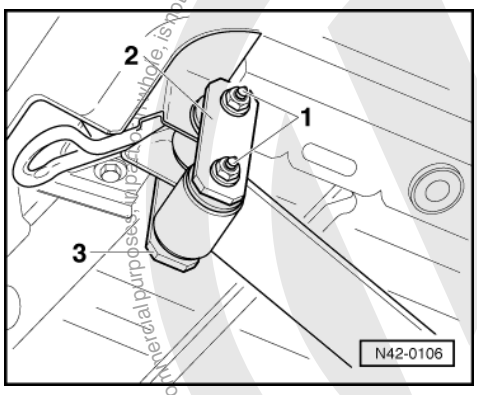

- -> Remove nuts -1- from the rear spring shackle.
- Lower rear axle slightly using gearbox jack V.A.G 1383 A.
- Remove spring shackle plates -2- and -3-.

satelettronica
Protected by copyright. Copying for private or commercial purposes, in part or in whole, is not permitted unless authorised by Volkswagen AG. Volkswagen AG does not guarantee or accept any liability with respect to the correctness of information in this document. Copyright by Volkswagen AG.

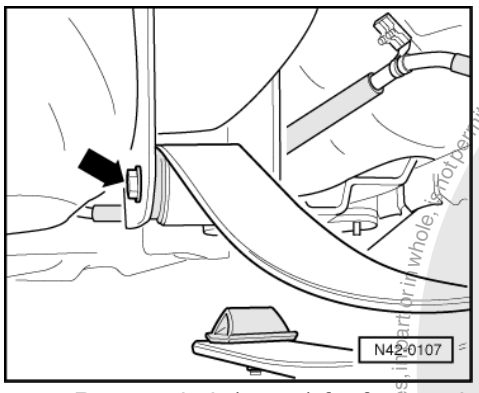

- -> Remove bolt (arrow) for front spring mounting.
- Remove leaf spring, if necessary lever centralizing pin out of rear axle.

Installing

Install in reverse order.

Tightening torques:	
Leaf spring to shackle, body	100 Nm
Leaf spring to body	100 Nm
Shock absorber to rear axle	100 Nm

Protected by copyright. Copying for private or commercial purposes, in part or in whole, is not permitted unless authorised by Volkswagen AG. Volkswagen AG does not guarantee or accept any liability with respect to the correctness of information in this document. Copyright by Volkswagen AG.
satelettronica

2 - Servicing wheel bearings, Caddy >09.99

2.1 - Servicing wheel bearings, Caddy >09.99

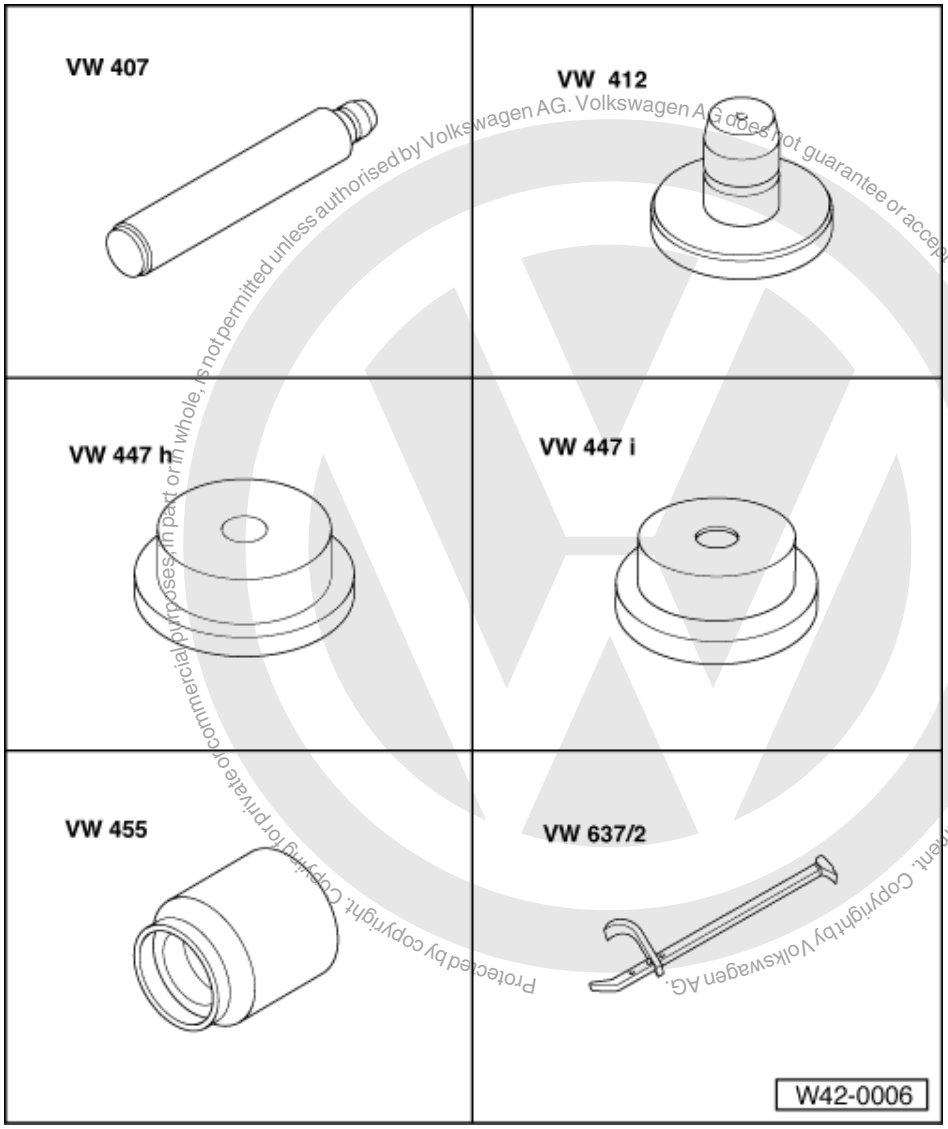

Protected by copyright. Copying for private or commercial purposes, in part or in whole, is not permitted unless authorised by Volkswagen AG. Volkswagen AG does not guarantee or accept any liability with respect to the correctness of information in this document. Copyright by Volkswagen AG.

satelettronica

Special tools and workshop equipment required

- VW 407 Press tool
- VW 412 Press tool
- VW 447 H Press plate
- VW 447 i Thrust plate
- VW 455 Installing sleeve
- VW 637/2 Hub cap puller

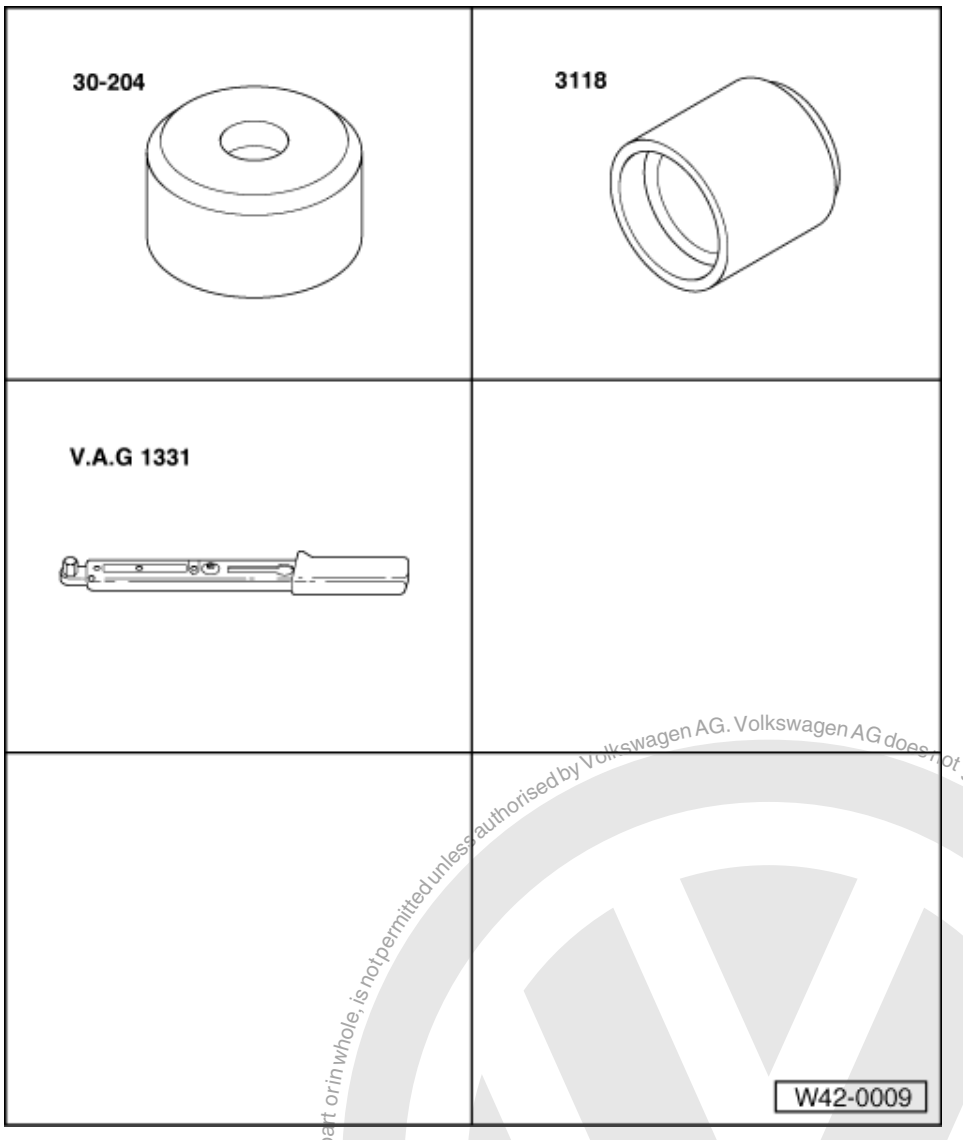

Special tools and workshop equipment required

- 30-204 Installing ring
- 3118 Tube
- V.A.G 1331 Torque wrench

Protected by copyright. Copying for private or commercial purposes, in part or in whole, is not permitted unless authorised by Volkswagen AG. Volkswagen AG does not guarantee or accept any liability with respect to the correctness of information in this document. Copyright by Volkswagen AG.
satelettronica

2.2 - Assembly overview, servicing wheel bearings, Caddy

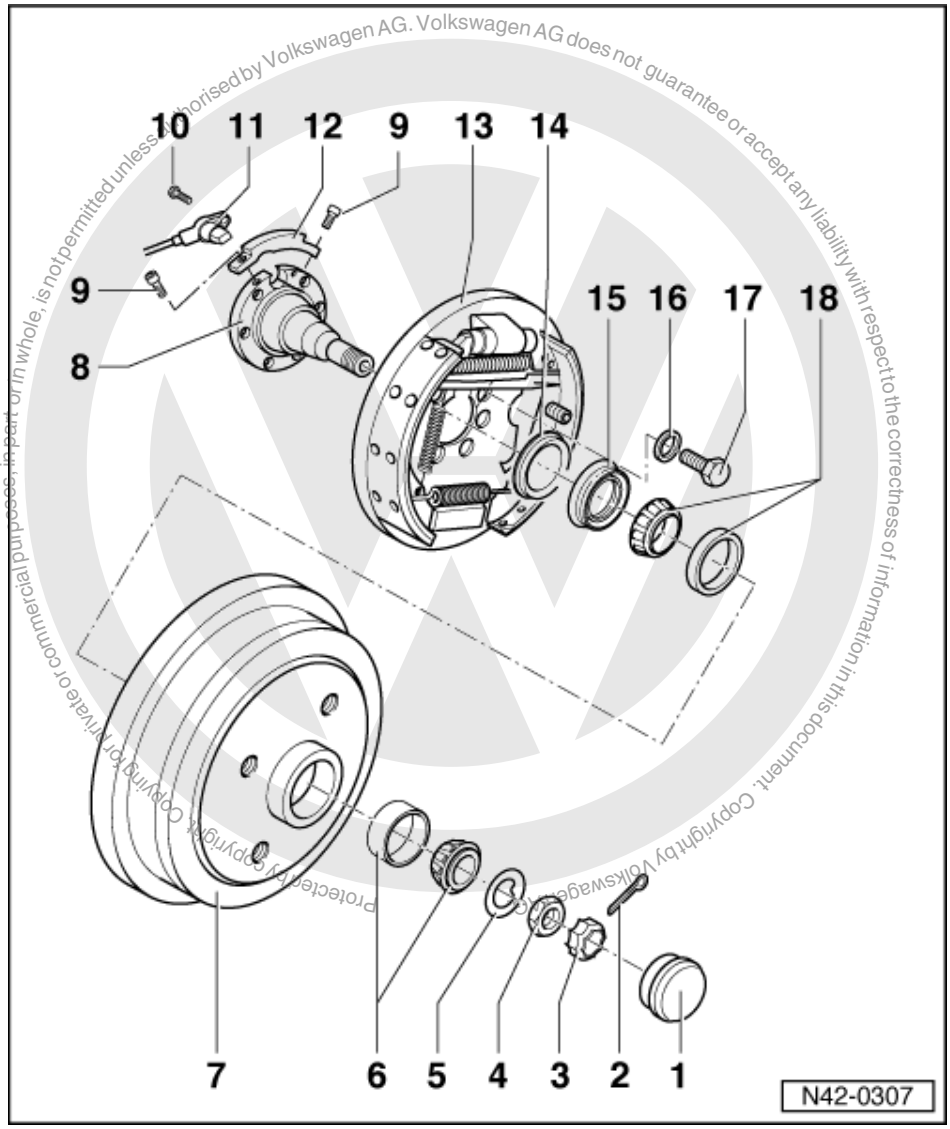

Copyright by Volkswagen AG. Volkswagen AG does not guarantee or accept any liability with respect to the correctness of information in this document. Copying for private or commercial purposes, in part or in whole, is not permitted unless authorised by Volkswagen AG.

satelettronica

Notes:

Careful sealing, absolute cleanliness and precise adjustment are prerequisites for long wheel bearing service life. Therefore note the following points:

- Install oil seal and grease cap as shown.
- Only reinstall clean bearings, do not wash bearings.
- Adjust wheel bearing play carefully.

1 Grease cap
- Pressing off => Fig. 1 and 2
- Driving in => Fig. 3
  Modification:
  From vehicle identity No. 9KWR503 258 a modified grease cap has been introduced. It is also driven in as shown on Fig. 3

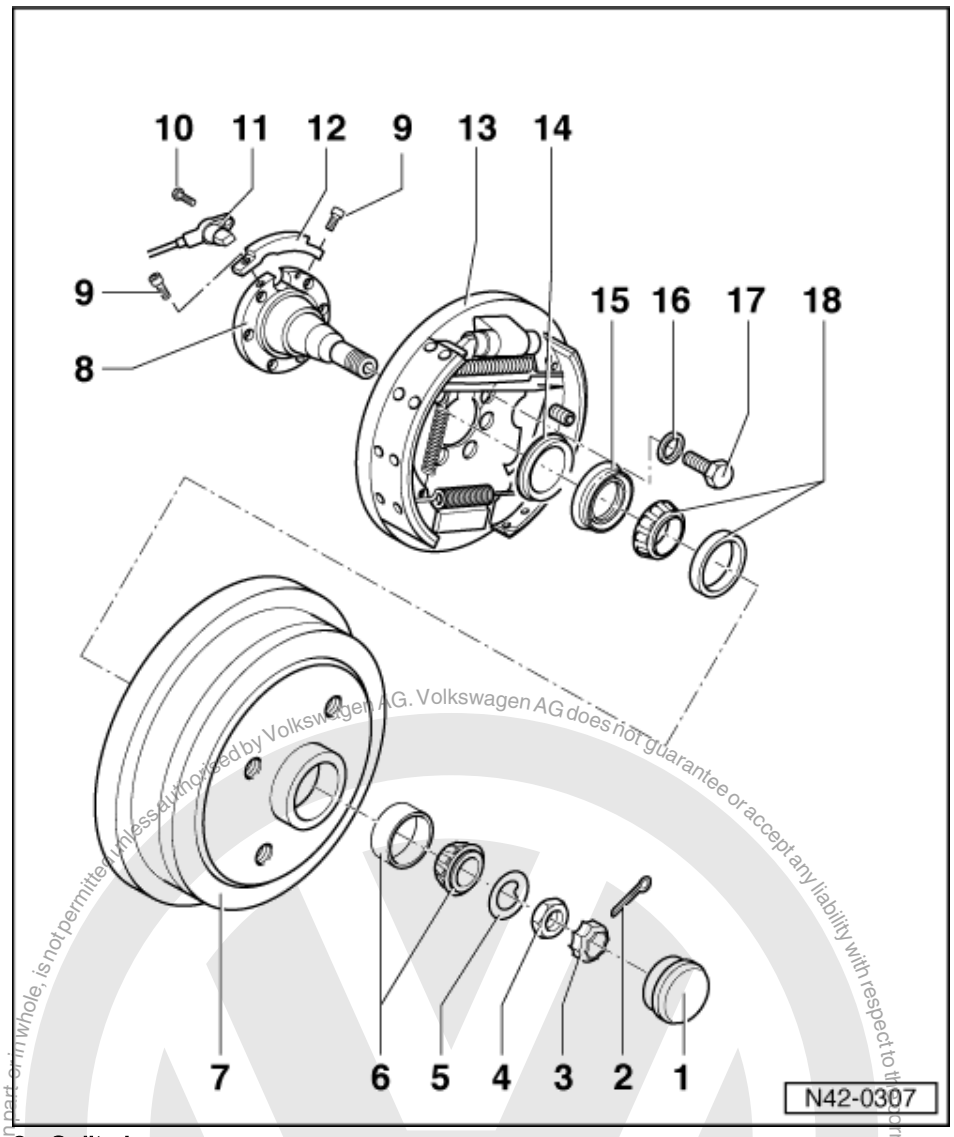

2 Split pin
- Renew

3 Locking ring

4 Hexagon nut
- Adjusting wheel bearing play => Fig. 4

5 Thrust washer

6 Outer wheel bearing
- Drive out outer race with copper drift
- Pressing in => Fig. 6

7 Brake drum
- Before removing release brake shoe adjustment through wheel bolt hole => Fig. 5
- Fill hub with multi-purpose grease before installing

Protected by copyright. Copyright by Volkswagen AG.
Volkswagen AG does not guarantee or accept any liability with respect to the correctness of information in this document. Copyright by Volkswagen AG.
Reproduction, in whole or in part, for commercial purposes is not permitted unless authorised by Volkswagen AG.
satelettronica

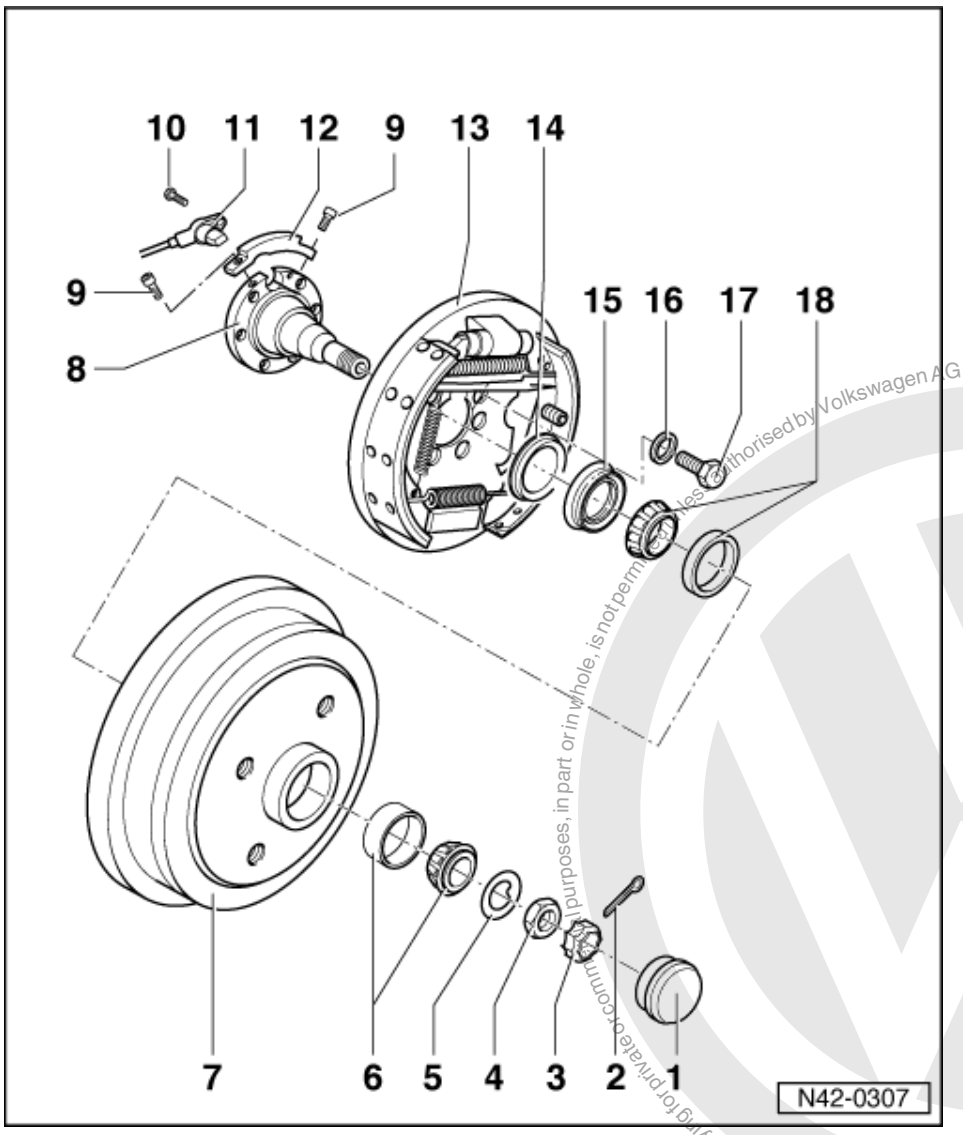

8 Stub axle

- Straightening operations are not permitted!
  Modification:
  From vehicle identity No. 9KW R 503 258 the seal running surface on the stub axle has been modified
  The seal -item 15 - and grease cap -item 1 - have also been modified accordingly

9 Socket head bolt

10 Hexagon socket head bolt, 10Nm

11 ABS speed sensor

12 Bracket

13 Brake backplate

- Bolt together with stub axle onto rear axle

satelettronica
Copyright by Volkswagen AG. Volkswagen AG does not guarantee or accept any liability with respect to the correctness of information in this document. Copyright by Volkswagen AG. Copying for private or commercial purposes, in part or in whole, is not permitted unless authorised by Volkswagen AG. Volkswagen AG does not guarantee or accept any liability with respect to the correctness of information in this document. Copyright by Volkswagen AG.

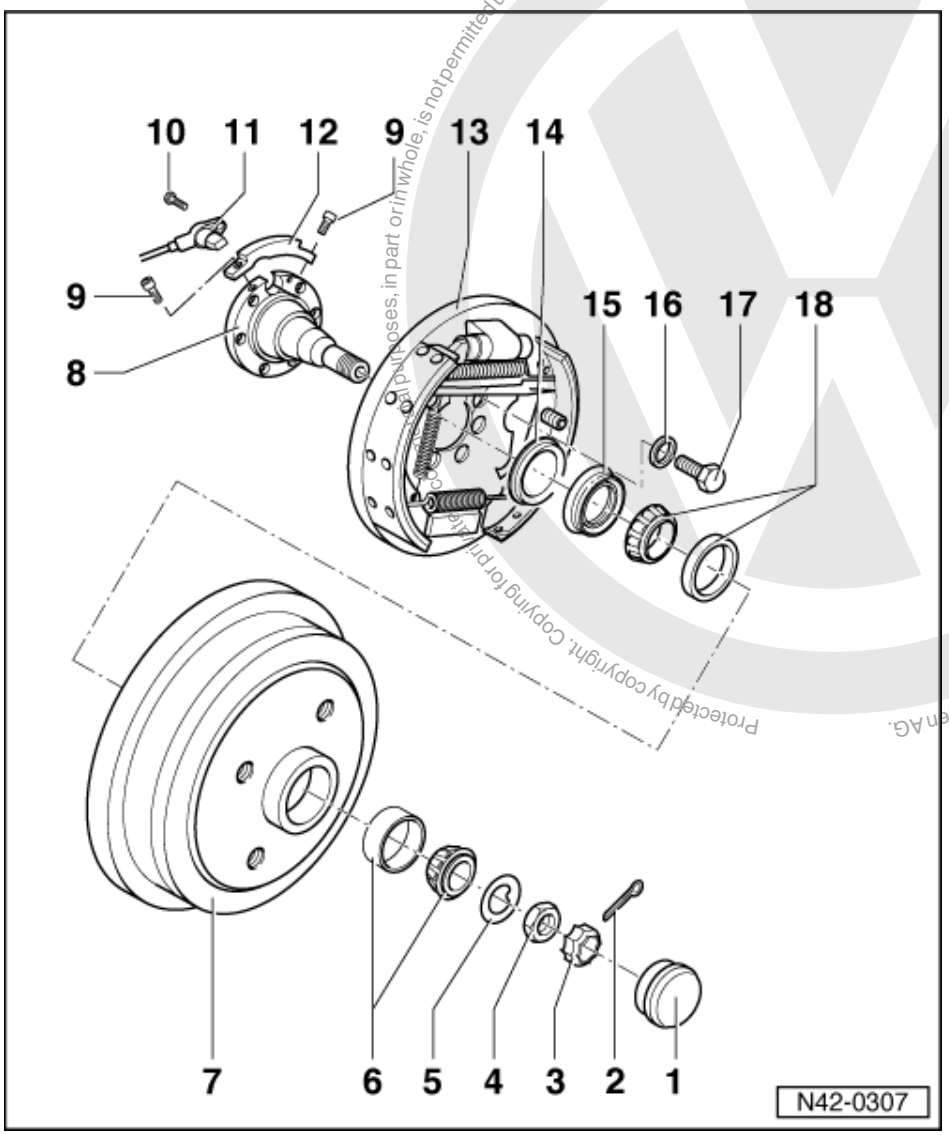

14 Oil seal

Modification:
This seal was used up to vehicle identity No. 9KWR 503 257

- Fill between sealing lips with multi-purpose grease.
- Driving in =>Fig.8

15 Oil seal

From vehicle identity No.
9KWR 503 258

- Repair instructions => Page 108

16 Dished washer

- Larger contact surface (concave side) to brake backplate

17 Hexagon bolt, 40 Nm

18 Inner wheel bearing

- Drive out outer race with copper drift
- Pressing in =>Fig. 7

Protected by copyright. Copying for private or commercial purposes, in part or in whole, is not permitted unless authorised by Volkswagen AG. Volkswagen AG does not guarantee or accept any liability with respect to the correctness of information in this document. Copyright by Volkswagen AG.
satelettronica

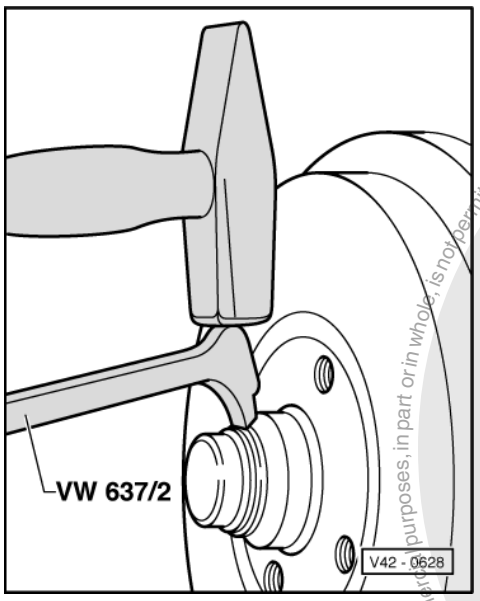

-> Fig.1 Pressing off grease cap

Loosen grease cap from seat by tapping lightly on the claw.

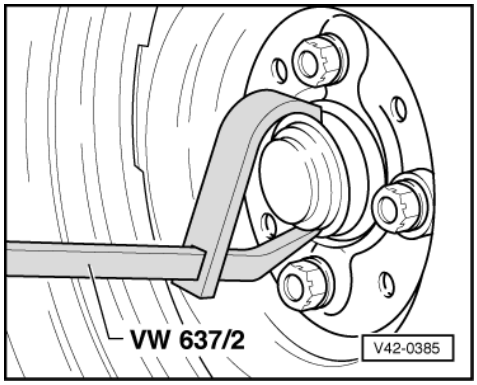

-> Fig.2 Pressing off grease cap

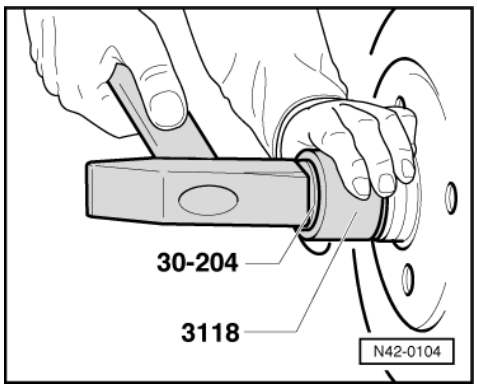

-> Fig.3 Driving in grease cap

Notes:

- Always renew grease caps.

Protected by copyright. Copying for private or commercial purposes, in part or in whole, is not permitted unless authorised by Volkswagen AG. Volkswagen AG does not guarantee or accept any liability with respect to the correctness of information in this document. Copyright by Volkswagen AG.
satelettronica

- Damaged grease caps allow moisture to penetrate, so always use the tool illustrated.

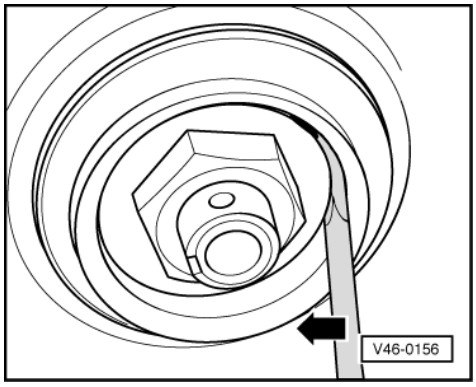

-> Fig.4 Adjusting wheel bearing play

Note:

Using a screwdriver it must be possible to move the thrust washer by finger pressure (without leverage).

- Secure with locking ring and new split pin.

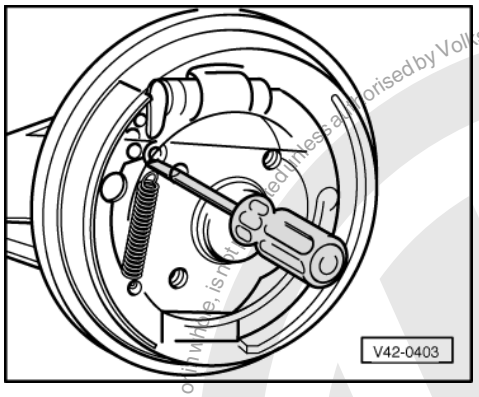

-> Fig.5 Releasing brake shoe adjustment

- Insert a screwdriver through a hole in the brake drum and push the wedge upwards.

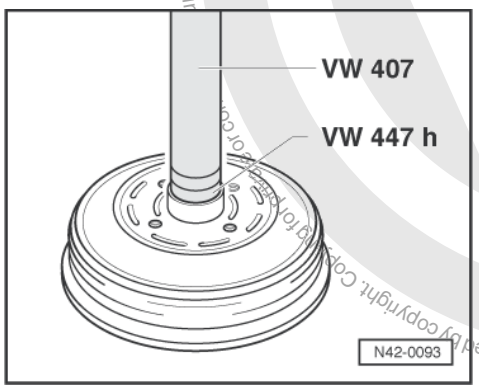

satelettronica
Protected by copyright. Copying for private or commercial purposes, in part or in whole, is not permitted unless authorised by Volkswagen AG. Volkswagen AG does not guarantee or accept any liability with respect to the correctness of information in this document. Copyright by Volkswagen AG.

-> Fig.6 Pressing in outer wheel bearing outer race

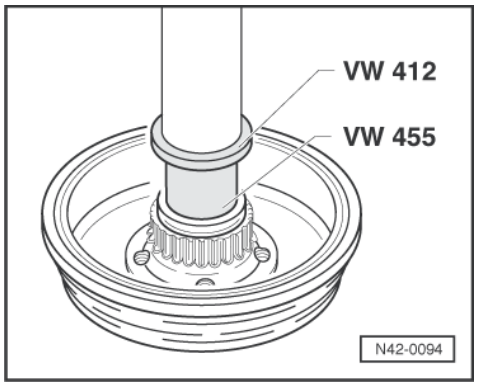

-> Fig.7 Pressing in inner wheel bearing outer race

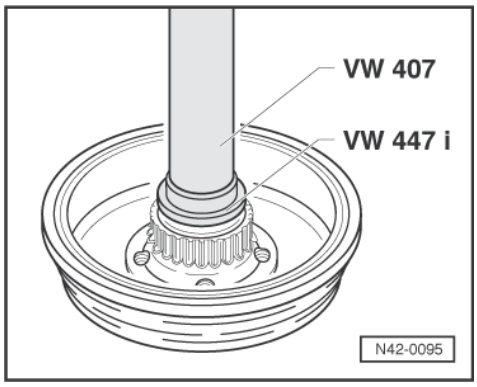

-> Fig.8 Driving in oil seal

2.3 - Installing seal to vehicles from vehicle identity No. 9KWR503258

With the introduction of the modified seal the sealing of the wheel bearing has been optimised.

If the modified seal is to be service installed in vehicles up to 9KWR503257 then the following replacement parts must also be used.

- Stub axle from vehicle identity No.9KWR503258
- Seal from vehicle identity No. 9KWR503258
- Grease cap from vehicle identity No. 9KWR503258

Installing seal

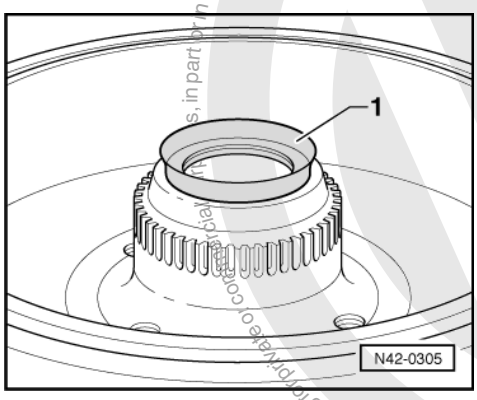

satelettronica
Protected by copyright. Copying for private or commercial purposes, in part or in whole, is not permitted unless authorised by Volkswagen AG. Volkswagen AG does not guarantee or accept any liability with respect to the correctness of information in this document. Copyright by Volkswagen AG.

-> Installation position of seal

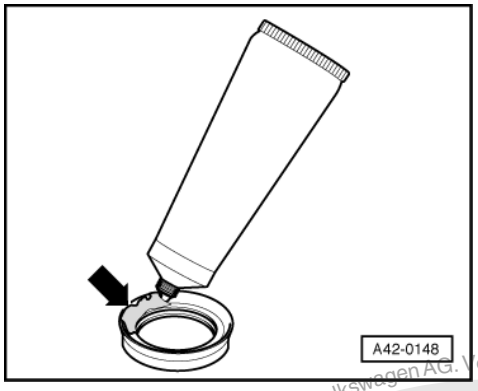

-> Greasing seal

Use multi-purpose grease G 052 735 A2

- Place a bead of grease approx. 3 to 4 mm thick onto seal sealing lip -arrow-.
- Grease space between sealing lips with multi-purpose grease.

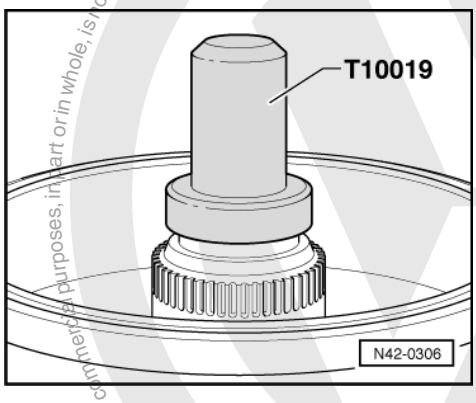

-> Driving in seal

- Drive seal in with special tool T 10019 until the special tool lies on the hub on the brake drum.

Protected by copyright. Copyright by Volkswagen AG.
Copyright by Volkswagen AG. Volkswagen AG does not guarantee or accept any liability with respect to the correctness of information in this document. Copyright by Volkswagen AG.
satelettronica

3 - Servicing wheel bearings (Caddy) 10.99 >

3.1 - Servicing wheel bearings (Caddy) 10.99 >

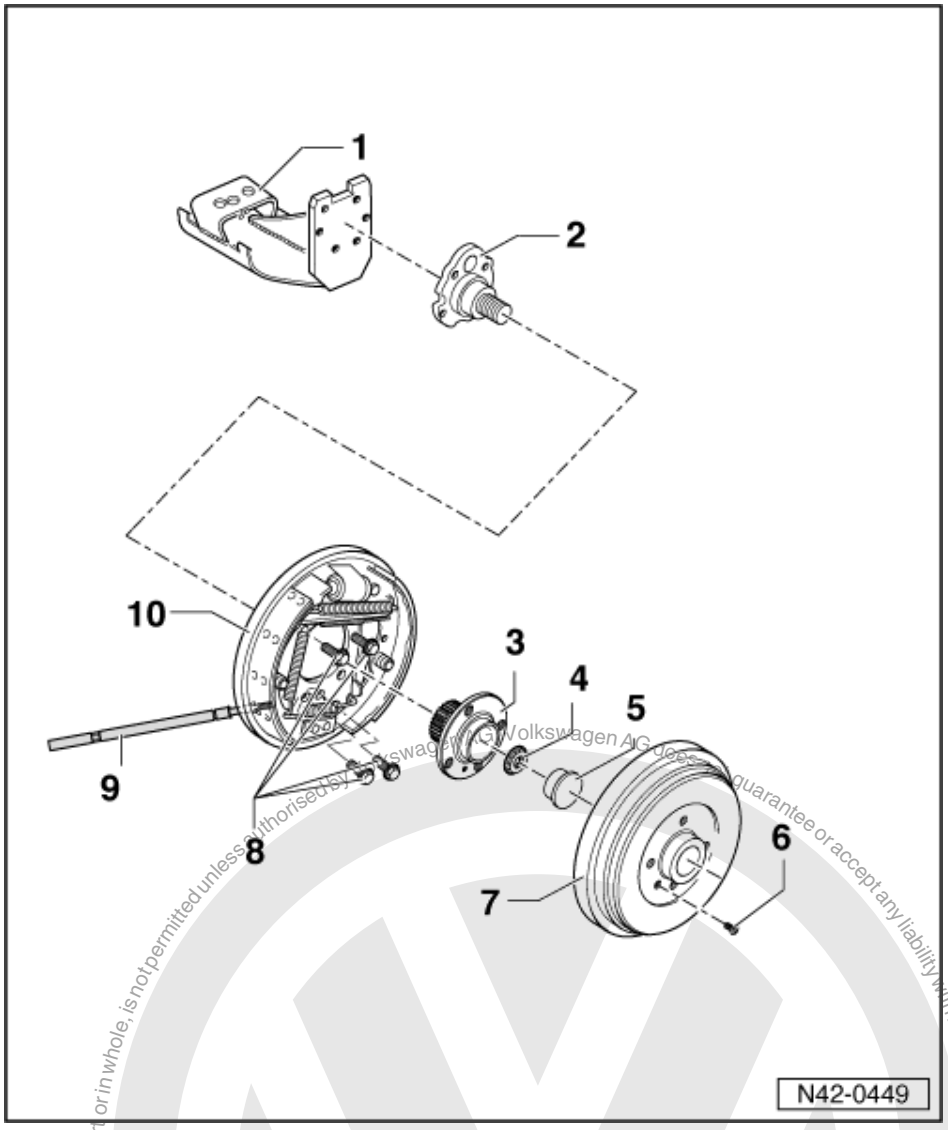

3.2 - Assembly overview, servicing wheel bearings, Caddy

1 Axle beam
2 Stub axle
- Straightening operations are not permitted
- Recutting the thread is not permitted!

3 Wheel hub with wheel bearings

The wheel bearing and wheel hub are installed together in a housing.

This wheel bearing/hub unit is maintenance and adjustment free. Adjusting and servicing is not possible!

Protected by copyright. Copyright by Volkswagen AG.

satelettronica

Protected by copyright. Copying for private or commercial purposes, in part or in whole, is not permitted unless authorised by Volkswagen AG. Volkswagen AG does not guarantee or accept any liability with respect to the correctness of information in this document. Copyright by Volkswagen AG.

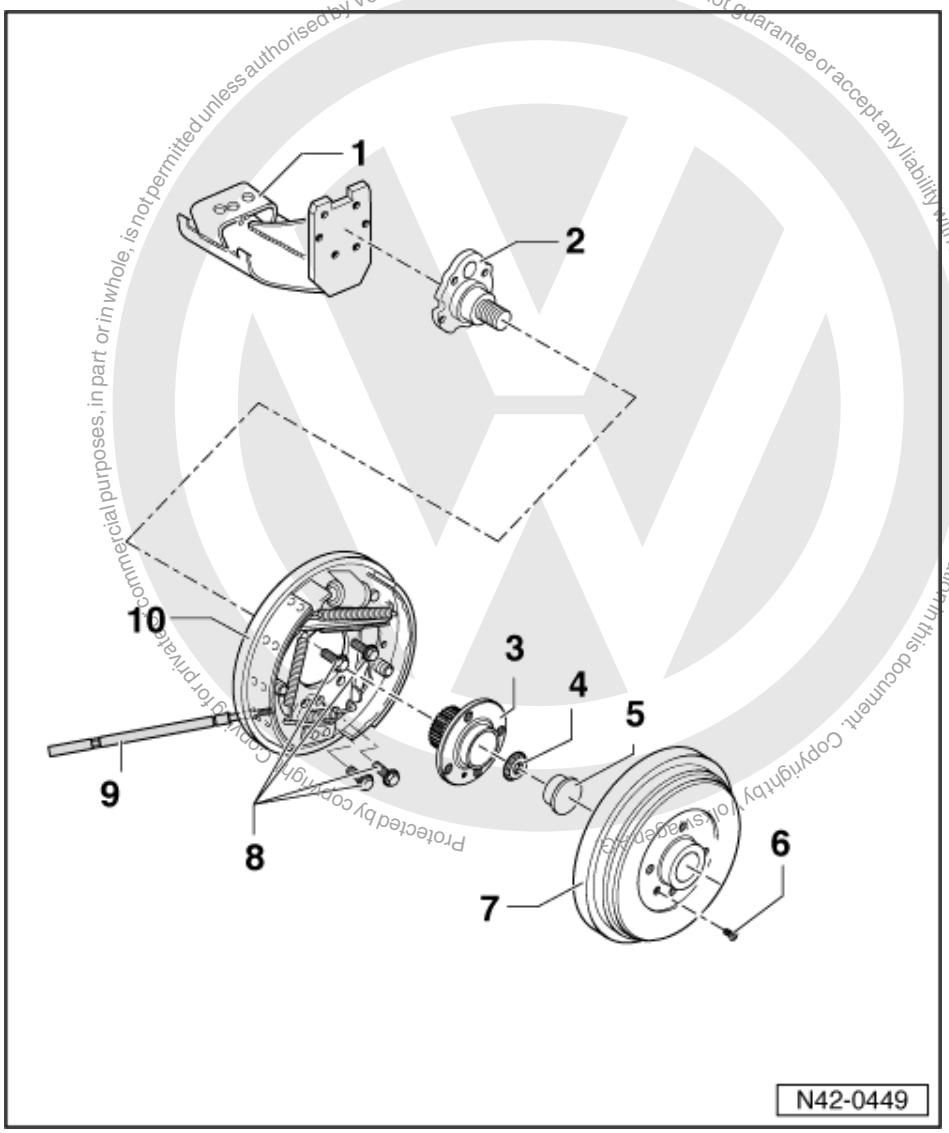

4 Self-locking 12-point nut, 175 Nm
- Renew each time after removing

5 Dust cap
- Renew each time after removing
  A perfect seal is only achieved using a new dust cap.
  Only then is an optimum function and long service life guaranteed.
- Pressing off and driving in => from Page 112

6 Cross-head screw

7 Brake drum

8 Hexagon head bolt, 60 Nm
- Renew each time after removing

9 Handbrake cable

10 Back plate with brake shoes

satelettronica

3.3 - Removing and installing wheel bearing/wheel hub unit, vehicles with brake drums

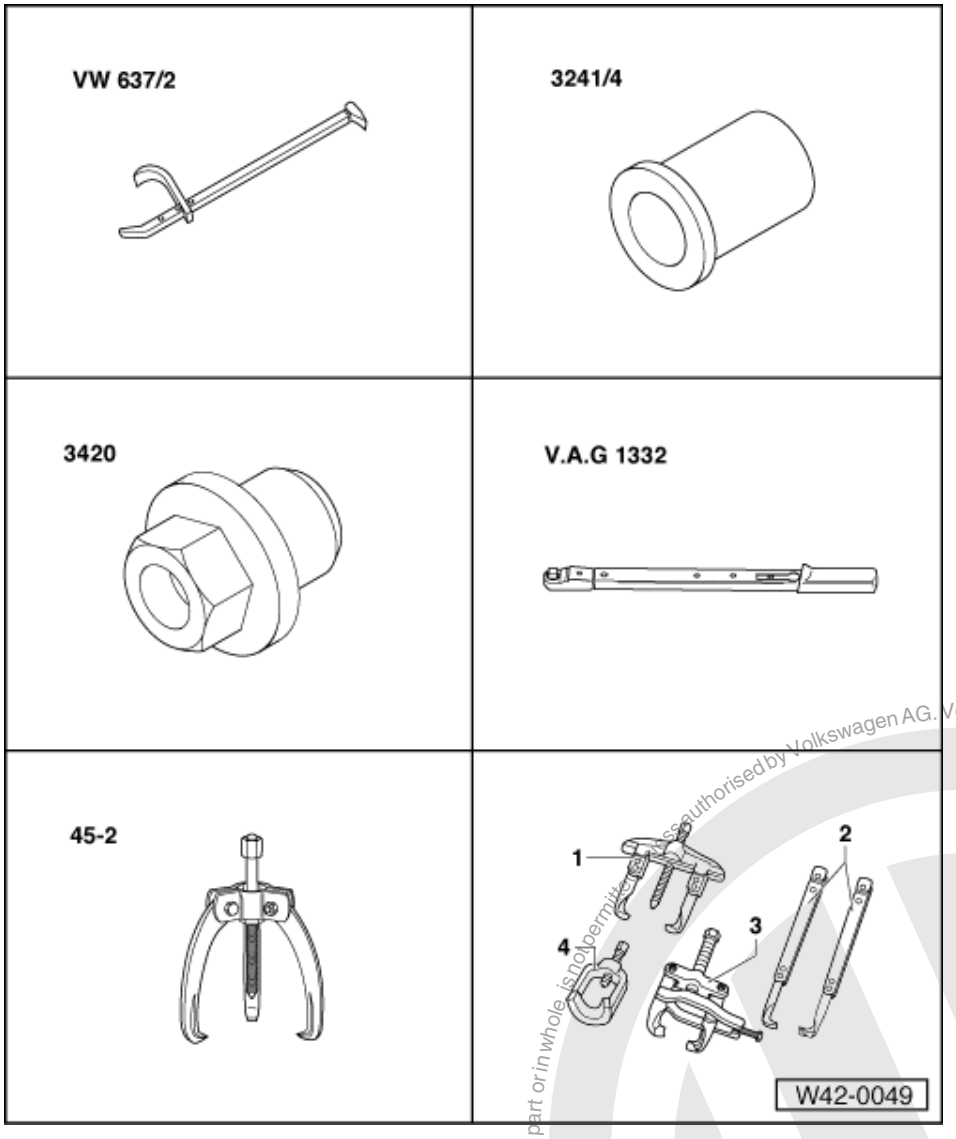

Special tools and workshop equipment required

- VW 637/2 Hub cap puller
- 3241/4 Press tool
- 3420 Assembly tool
- V.A.G 1332 Torque wrench
- Kukko 45-2 Three-arm puller
- 3 - Kukko 204/1 Puller

Protected by copyright. Copying for private or commercial purposes, in part or in whole, is not permitted unless authorised by Volkswagen AG. Volkswagen AG does not guarantee or accept any liability with respect to the correctness of information in this document. Copyright by Volkswagen AG.
satelettronica

Copyright by Volkswagen AG. Volkswagen AG does not guarantee or accept any liability with respect to the correctness of information in this document. Copying for private or commercial purposes, in part or in whole, is not permitted unless authorised by Volkswagen AG.

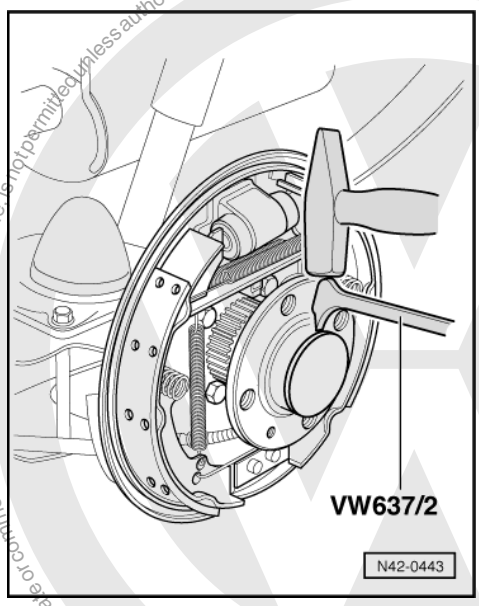

-> Fig.1 Pressing off dust cap

Loosen dust cap from seat by tapping lightly on the claw.

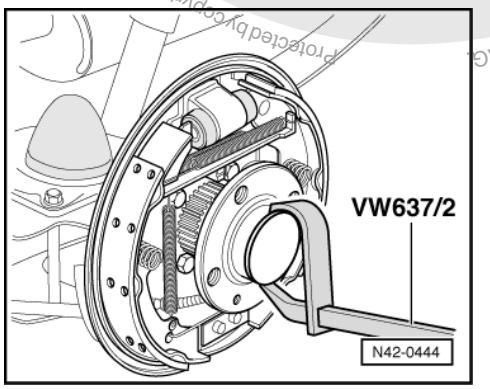

-> Fig.2 Pressing off dust cap

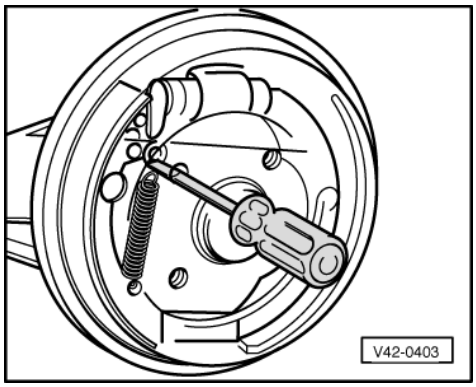

-> Fig.3 Releasing brake shoe adjustment

- Insert a screwdriver through a hole in the brake drum and push the wedge upwards.

satelettronica

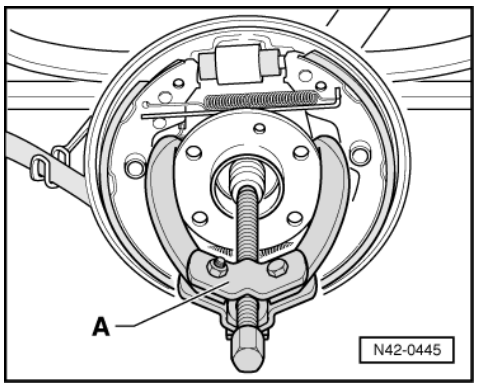

- Remove cross-head screw for brake drum and take off brake drum.
- Remove 12-point nut.

-> Fig.4 Pulling off wheel bearing/wheel hub unit

A - Kukko 45-2 Three-arm puller

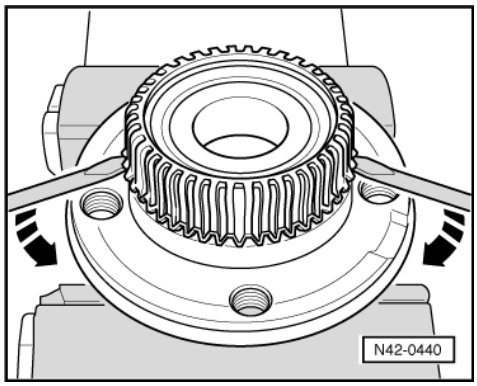

-> Fig.5 Pulling speed sensor rotor off wheel bearing/hub unit

- Lever rotor off wheel bearing/hub unit by prying alternately with two screwdrivers.

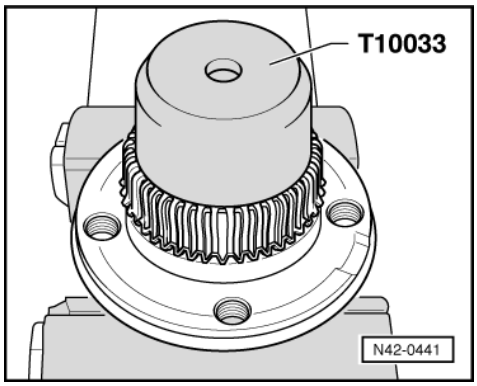

-> Fig.6 Driving speed sensor rotor onto wheel bearing/hub unit

- Drive speed sensor rotor onto stop using special tool T 10033.

Protected by copyright. Copying for private or commercial purposes, in part or in whole, is not permitted unless authorised by Volkswagen AG. Volkswagen AG does not guarantee or accept any liability with respect to the correctness of information in this document. Copyright by Volkswagen AG.
satelettronica

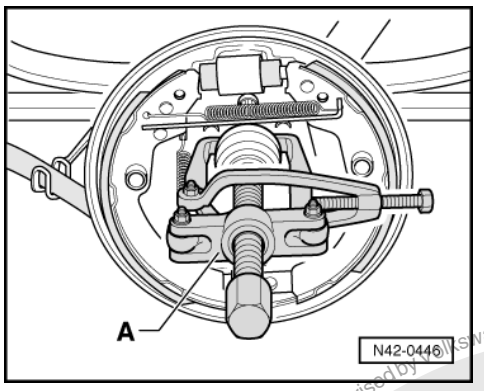

-> Fig.7 Pulling bearing inner race of stub axle

Only use puller -A- with leg clamp e.g. Kukko 204-2 (commercial type).

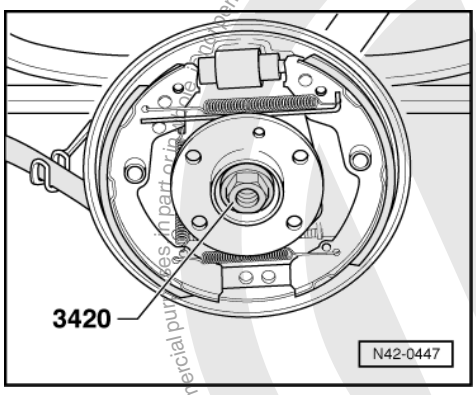

-> Fig.8 Pulling wheel bearing/wheel hub unit onto stub axle

- Fit wheel bearing/wheel hub unit as far as possible onto stub axle.
- Attach special tool 3420 and pull wheel bearing/wheel hub unit on onto stop.

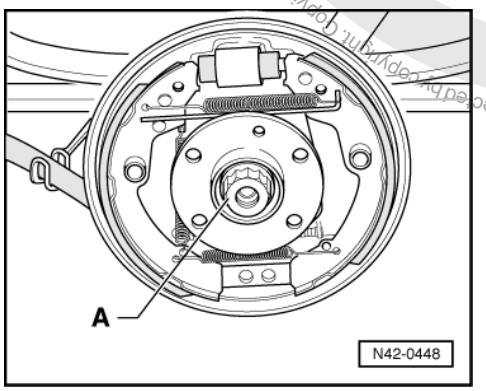

- Remove special tool 3420.
- Use a new 12-point nut -A- and tighten to 175 Nm.

Protected by copyright. Copying for private or commercial purposes, in part or in whole, is not permitted unless authorised by Volkswagen AG. Volkswagen AG does not guarantee or accept any liability with respect to the correctness of information in this document. Copyright by Volkswagen AG.
satelettronica

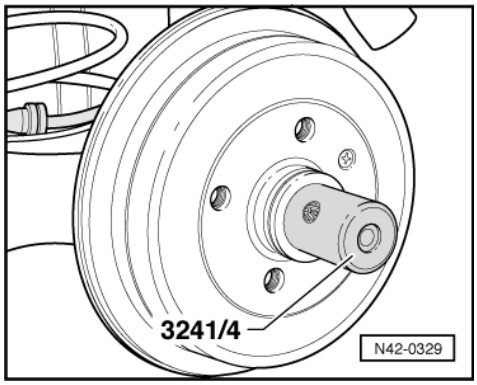

-> Fig.9 Driving in dust cap

Notes:

- Always renew grease caps.
- Damaged grease caps allow ingress of moisture, therefore always use the tool illustrated.

Further installation is performed in reverse order

Protected by copyright. Copying for private or commercial purposes, in part or in whole, is not permitted unless authorised by Volkswagen AG. Volkswagen AG does not guarantee or accept any liability with respect to the correctness of information in this document. Copyright by Volkswagen AG.
satelettronica

4 - Servicing rear axle, Polo Classic, Polo Estate

4.1 - Servicing rear axle, Polo Classic, Polo Estate

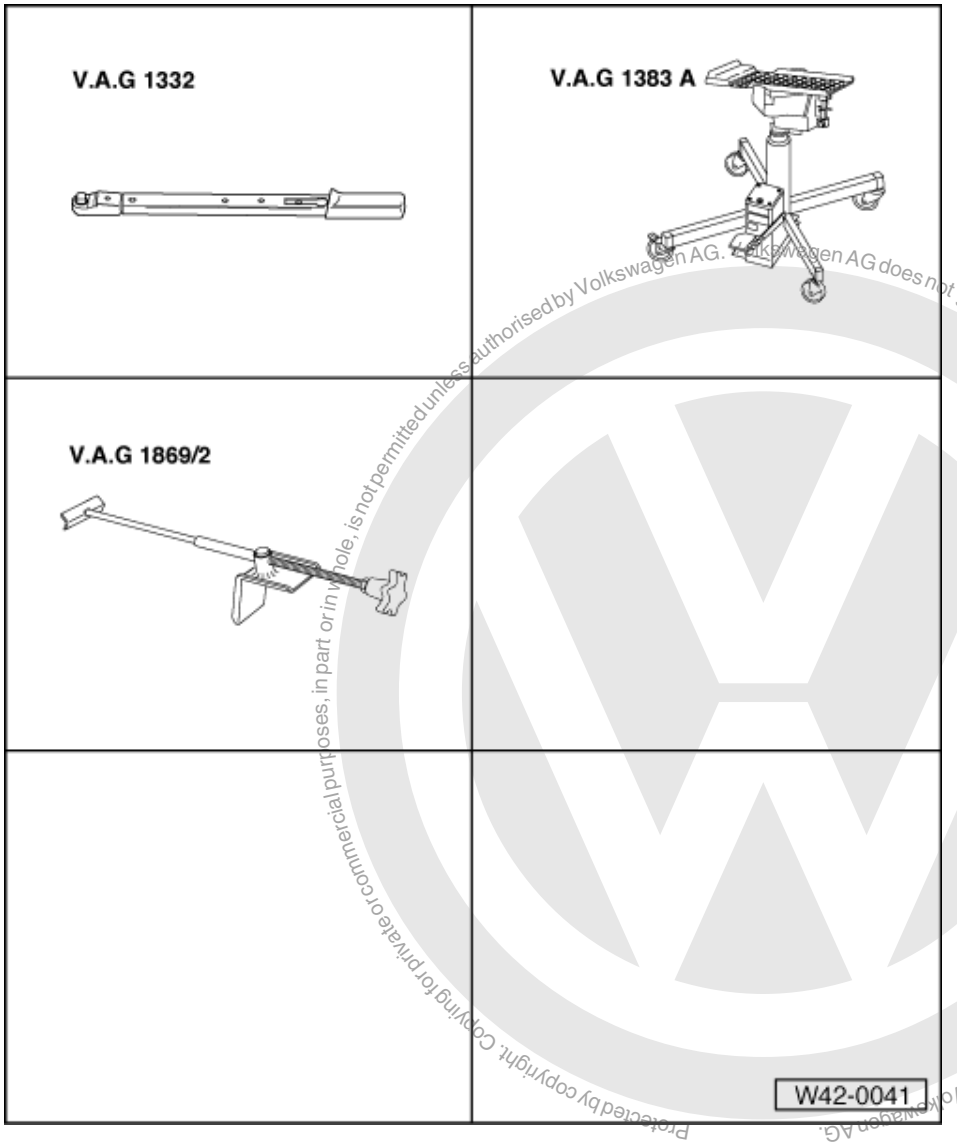

Protected by copyright. Copying for private or commercial purposes, in part or in whole, is not permitted unless authorised by Volkswagen AG. Volkswagen AG does not guarantee or accept any liability with respect to the correctness of information in this document. Copyright by Volkswagen AG.
satelettronica

4.2 - Removing and installing rear axle, Polo Classic, Polo Estate

Special tools and workshop equipment required

- V.A.G 1332 Torque wrench
- V.A.G 1383 A Engine/gearbox jack
- V.A.G 1869/2 Brake pedal depressor

Removing

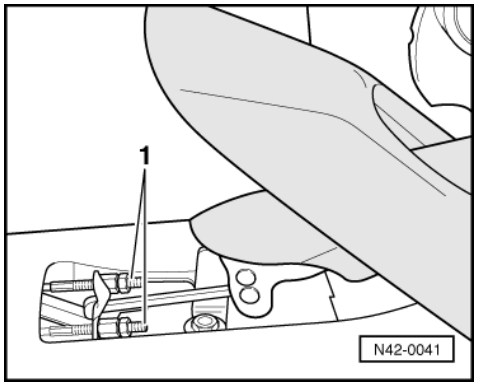

- -> Pull off handbrake lever trim.
- Disconnect handbrake cables -1- from handbrake lever.
- Fit brake pedal loading device V.A.G 1869/2.

This will prevent the brake fluid draining from the brake pipes and the ABS hydraulic unit!

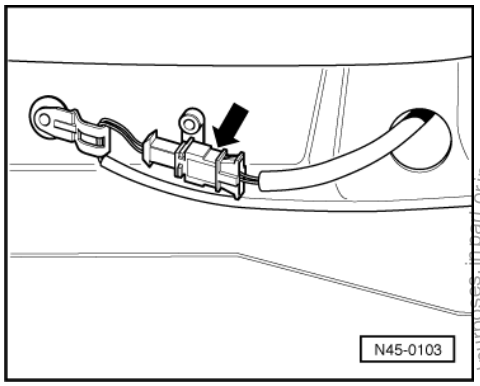

- Fold rear seat bench forwards.
- -> Separate speed sensor wiring connector -arrow-.

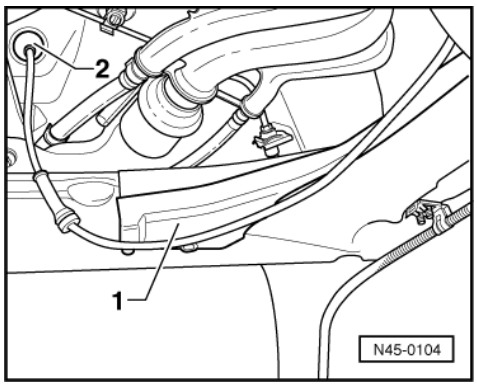

- Raise vehicle.
- -> Unclip grommet -2- and pull speed sensor wiring out of vehicle interior.
- Remove wheels.
- Lower rear silencer.

=> Repair group 26; Removing and installing parts of exhaust system. Removing and installing parts of exhaust system.

Protected by copyright. Copyright for private or commercial purposes, in part or in whole, is not permitted unless authorised by Volkswagen AG. Volkswagen AG does not guarantee or accept any liability with respect to the correctness of information in this document. Copyright by Volkswagen AG.
satelettronica

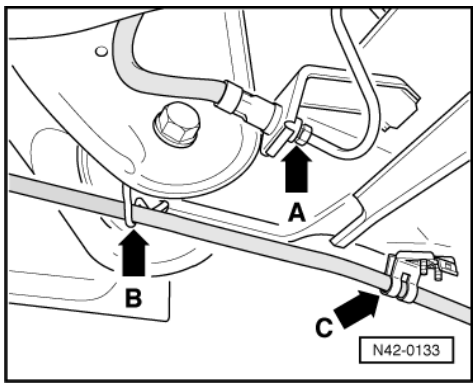

- -> Disconnect brake pipes (arrow A).
- Detach handbrake cables from the retainers (arrow B and arrow C).
- Pull handbrake cables out of guide tubes.
- Place engine/gearbox jack V.A.G 1383 A in position.
- Remove bolts for rear axle beam.

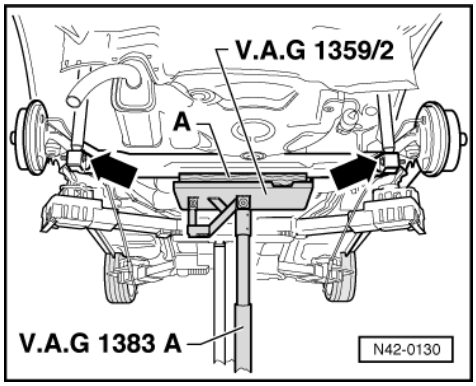

- -> Unbolt rear axle from shock absorbers (arrows).
- Lower rear axle using gearbox jack V.A.G 1383 A.
- Secure rear axle with a belt or similar when lowering and removing.

Installing

Install in reverse order.

- Bleeding brake system

=> Brake systems; repair group 47 Booklet, Bleeding brake system, vehicles with or without ABS

Tightening torques:	
Mounting bracket to rear axle Use new bolts and nuts! (vehicle resting on wheels)	65 Nm
Shock absorber to rear axle	55 Nm

Protected by copyright. Copying for private or commercial purposes, in part or in whole, is not permitted unless authorised by Volkswagen AG. Volkswagen AG does not guarantee or accept any liability with respect to the correctness of information in this document. Copyright by Volkswagen AG.
satelettronica

4.3 - Assembly overview, rear axle beam (Polo Classic, Polo Estate > 09.99)

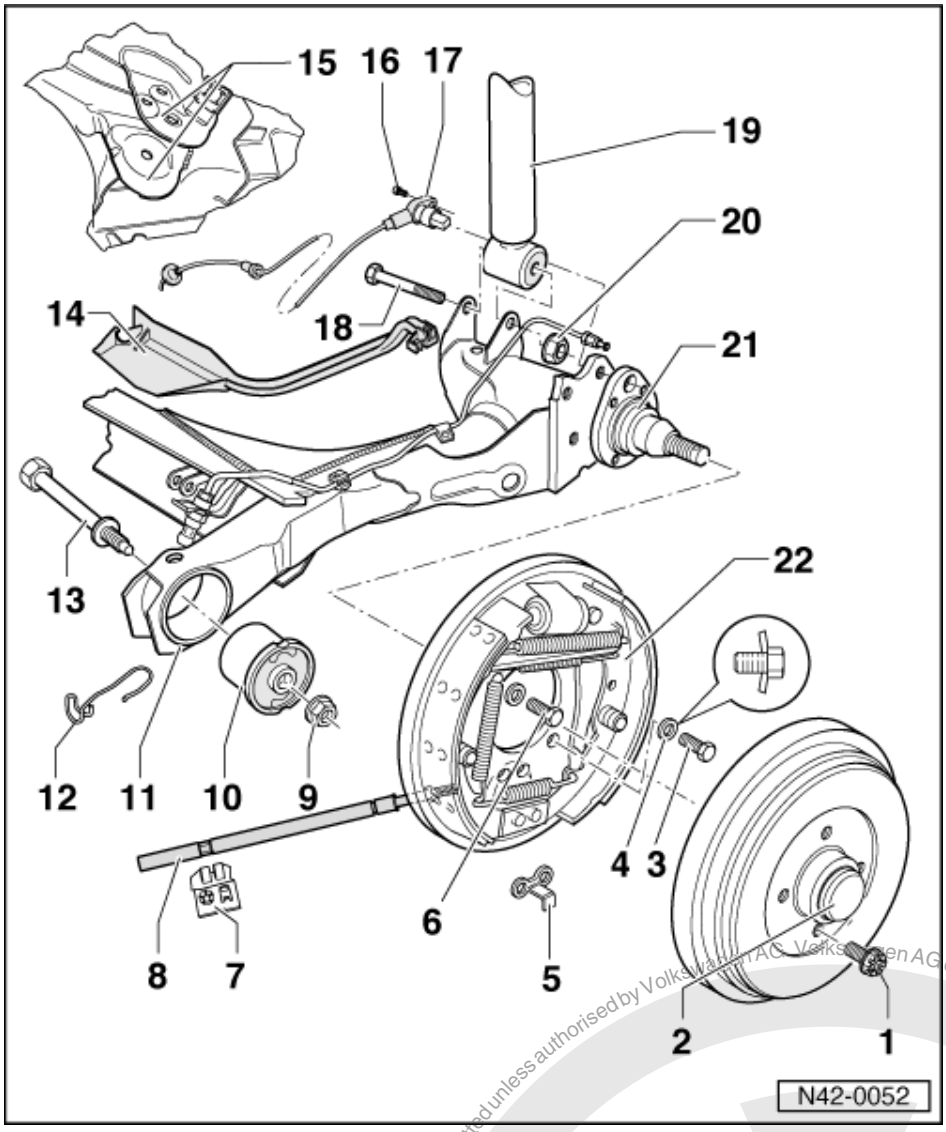

Note:

Welding and straightening on axle beam and stub axle is not permissible.

1 Wheel bolt, 110 Nm
2 Wheel bearing
- Servicing =>Page 143

3 Bolt, 60 Nm
- Use with dished spring - 4 -
- Used sometimes during production instead of bolt - 6 -
- Mixed installation with bolt - 6 - is possible

4 Dished spring
- Observe installation position

Protected by copyright. Copyright for private or commercial purposes, in part or in whole is not permitted unless authorised by Volkswagen AG. Volkswagen AG does not guarantee or accept any liability with respect to the correctness of information in this document. Copyright by Volkswagen AG.
satelettronica

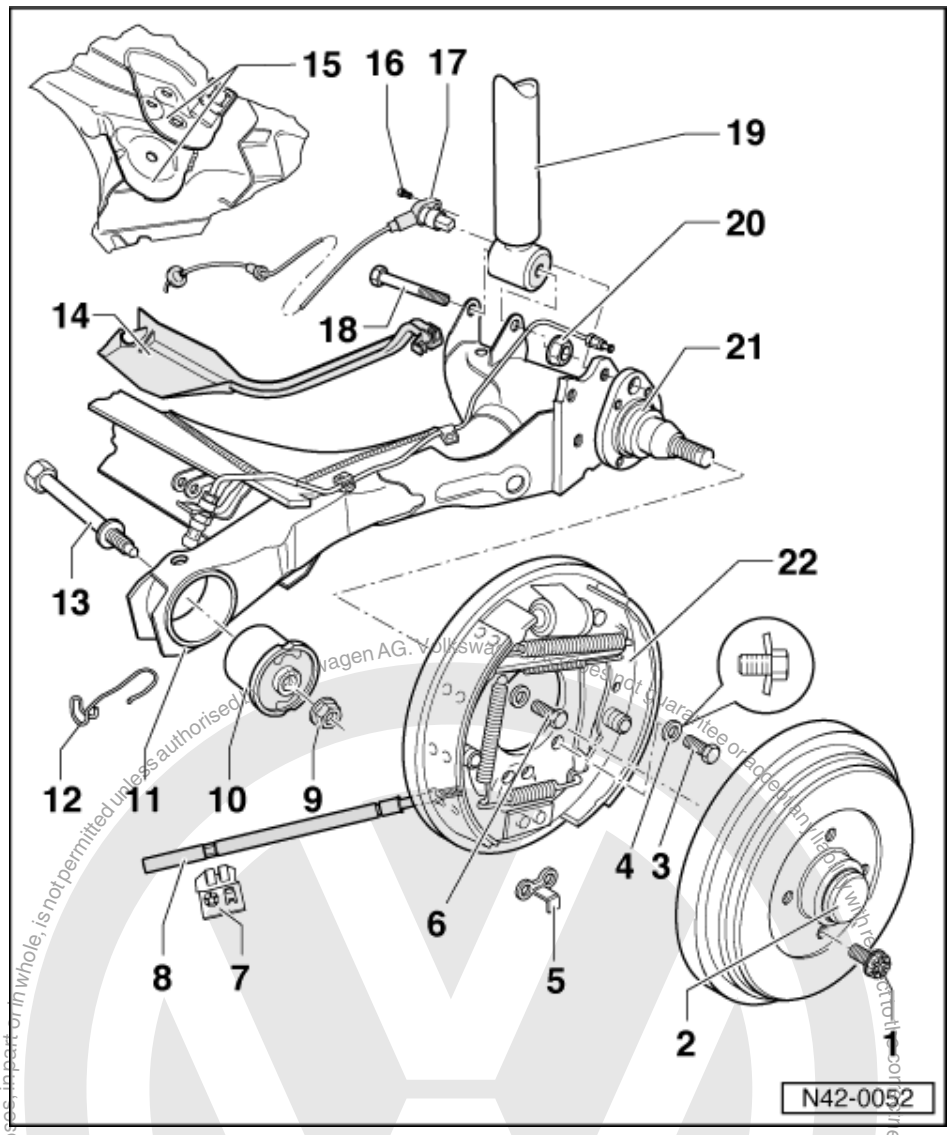

5 Guide for brake cable
- Only for 180 mm øbrake drum
- Bolted together without dished spring - 4 -

6 Bolt, 60 Nm
- Dished spring - 4 - must not be used
- Used sometimes during production instead of bolt - 3 -
- Mixed installation with bolt - 3 - is possible
- Not supplied as a replacement part

7 Handbrake cable bracket
- Renew

8 Handbrake cable

9 Self-locking hexagon nut; 65 Nm
- When tightening the nut the axle beam must be in the horizontal position (unladen vehicle state)
- Renew each time after removing

satelettronica

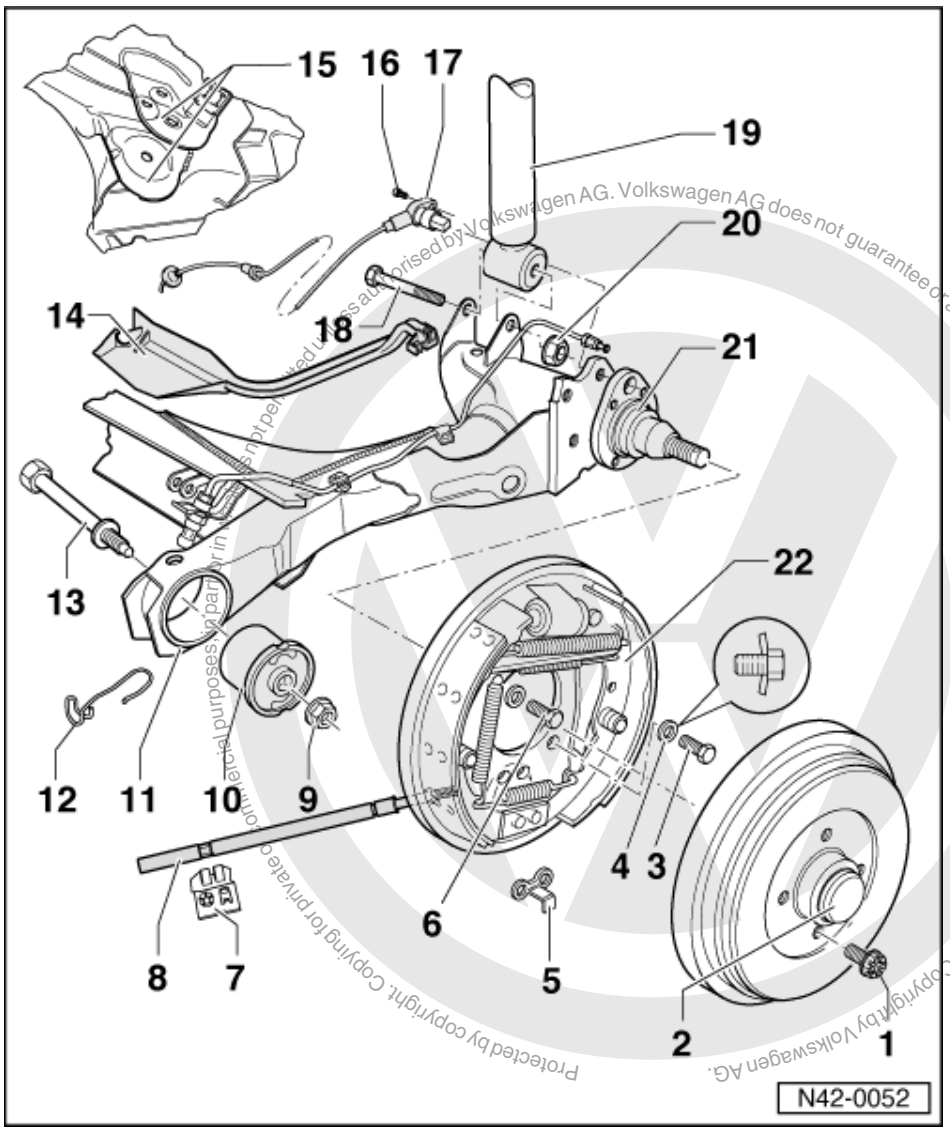

Protected by copyright. Copying for private or commercial purposes, in part or in whole, is not permitted unless authorised by Volkswagen AG. Volkswagen AG does not guarantee or accept any liability with respect to the correctness of information in this document. Copyright by Volkswagen AG.

satelettronica

10 Bonded rubber mounting
- Removing and installing =>Page 129

11 Axle beam
- Stub axle contact surfaces and threaded holes are to be free of paint and dirt

12 Handbrake cable bracket

13 Bolt
- Fit from centre of vehicle

14 Cable channel
- Only on vehicles with ABS

15 Rear axle bearing bracket

16 Hexagon socket head bolt, 10 Nm

17 ABS speed sensor

18 Bolt

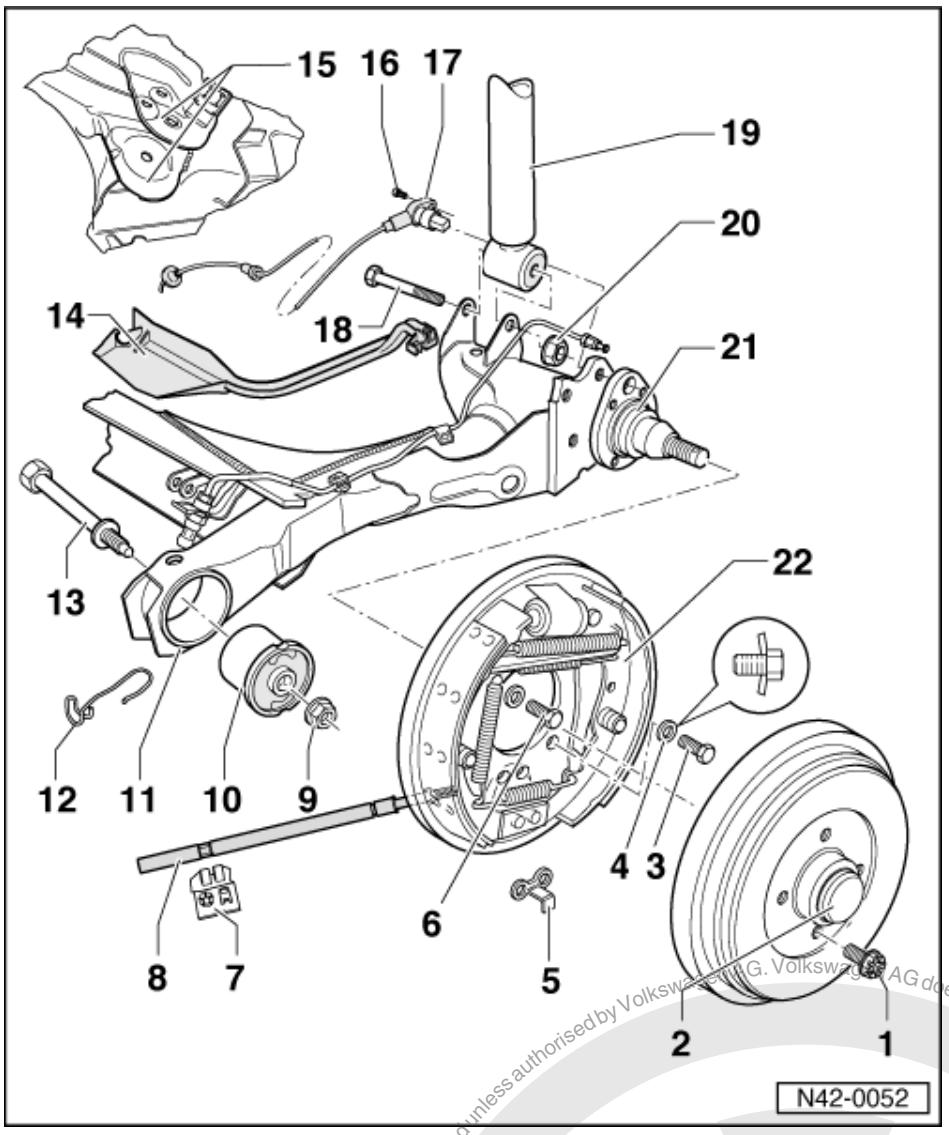

19 Shock absorber

20 Self-locking hexagon nut; 55 Nm

- When tightening observe the installation angle from rear axle to damper =>Fig. 1
- Renew each time after removing

21 Stub axle

- Straightening operations are not permitted!

22 Back plate with brake shoes

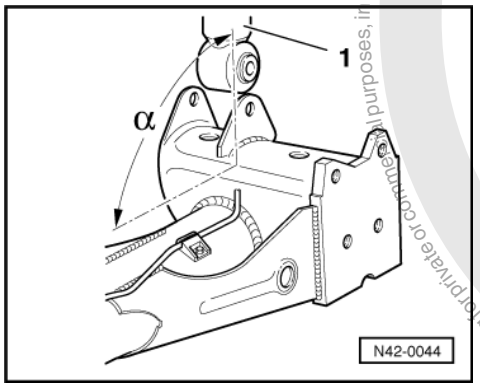

Protected by copyright. Copying for private or commercial purposes, in part or in whole, is not permitted unless authorised by Volkswagen AG. Volkswagen AG does not guarantee or accept any liability with respect to the correctness of information in this document. Copyright by Volkswagen AG.
satelettronica

-> Fig.1 Rear axle/shock absorber installation angle

1 - Shock absorber
α - Approx. 95°

Copyright by Volkswagen AG. Volkswagen AG does not guarantee or accept any liability with respect to the correctness of information in this document. Copying for private or commercial purposes, in part or in whole, is not permitted unless authorised by Volkswagen AG.

4.4 - Assembly overview, rear axle beam, Polo Classic, Polo Estate 10.00 >

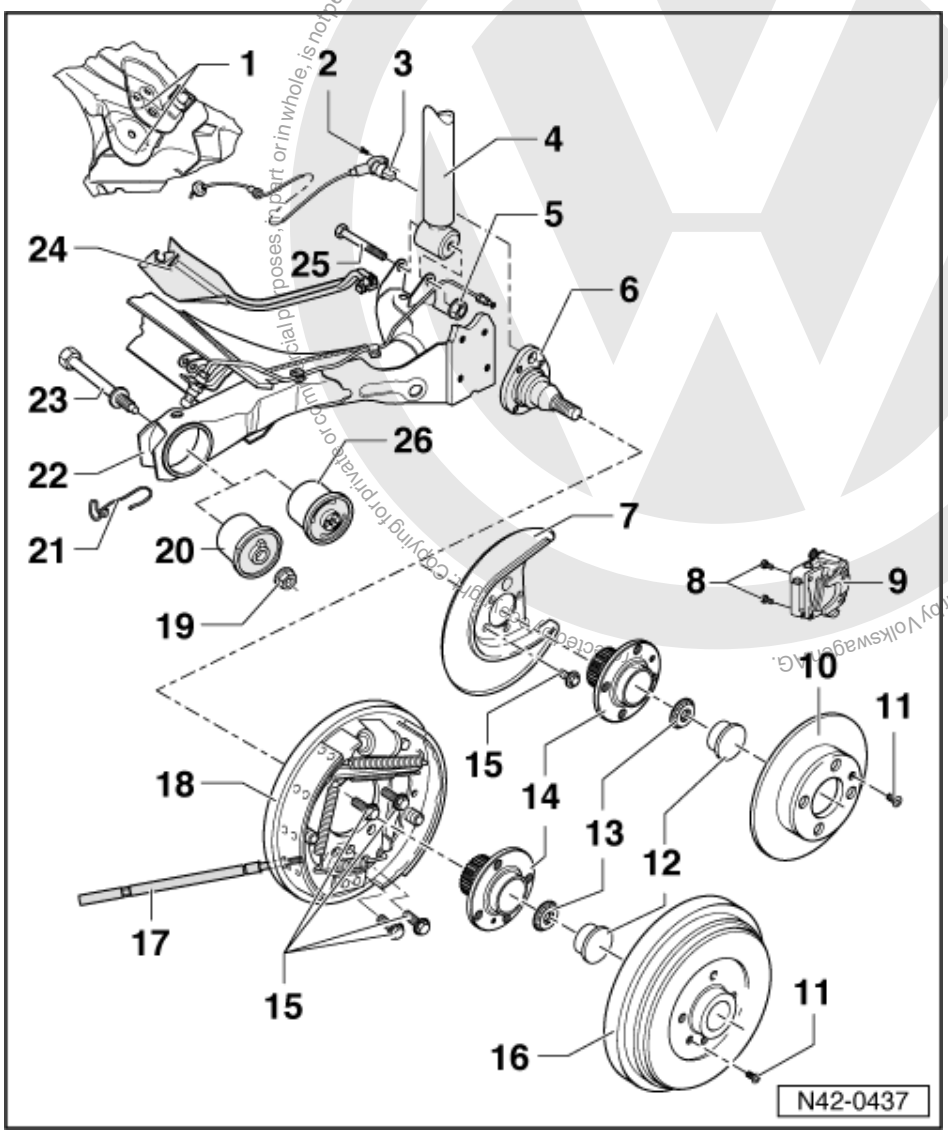

Note:

Welding and straightening on axle beam and stub axle is not permissible.

1 Rear axle bearing bracket
2 Hexagon socket head bolt, 10 Nm
3 ABS speed sensor
4 Shock absorber
5 Self-locking hexagon nut; 55 Nm
- When tightening, observe the installation angle from rear axle to damper =>Page 124
- Renew each time after removing

satelettronica

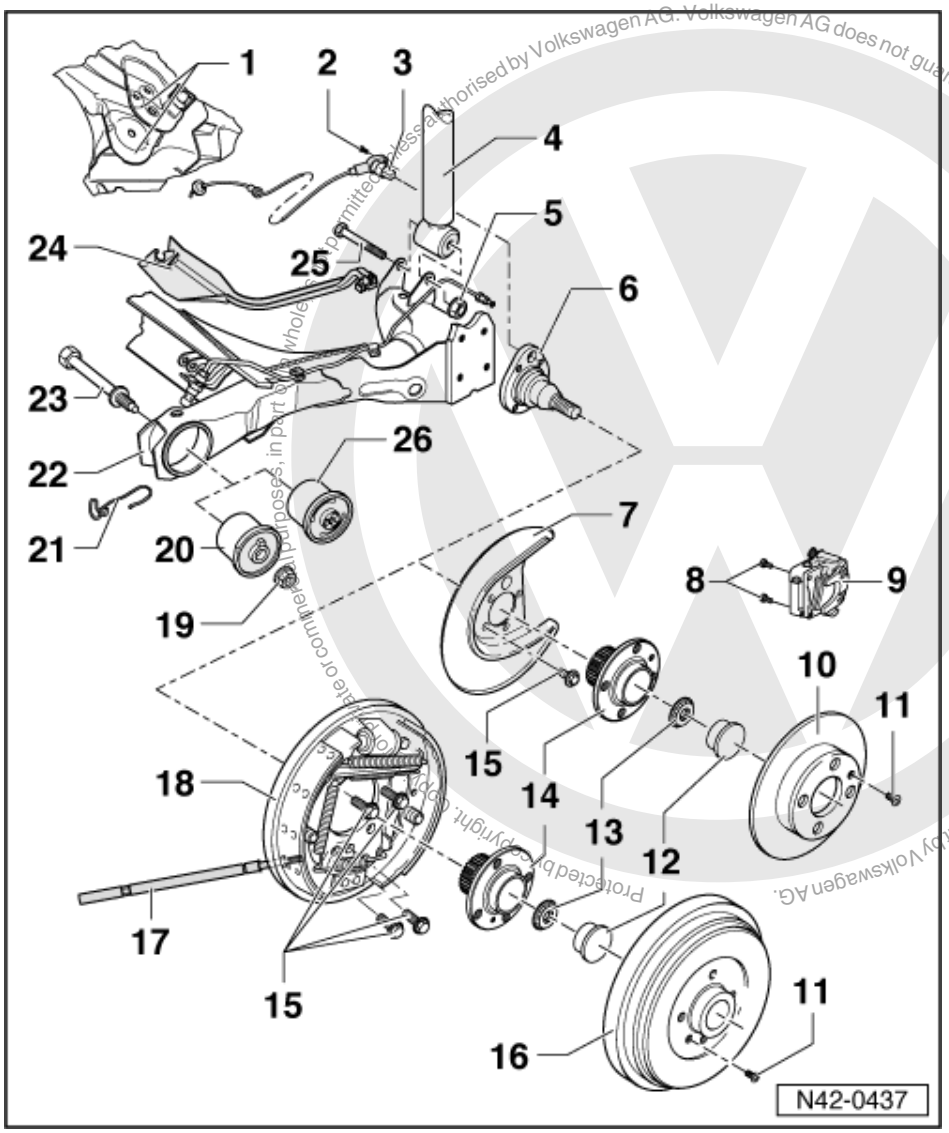

6 Stub axle
- Straightening operations are not permitted!
- Allocation

=> Replacement parts catalogue

7 Splash plate
8 Hexagon socket head bolt, 65 Nm
- Renew each time after removing

9 Brake caliper
- Servicing

=> Brake system; Repair group 46; Servicing rear brakes (disc brakes) Servicing rear brakes (disc brakes)

10 Brake disc
11 Cross-head screw

Protected by copyright. Copyright by Volkswagen AG.
Volkswagen AG does not guarantee or accept any liability with respect to the correctness of information in this document. Copyright by Volkswagen AG.
satelettronica

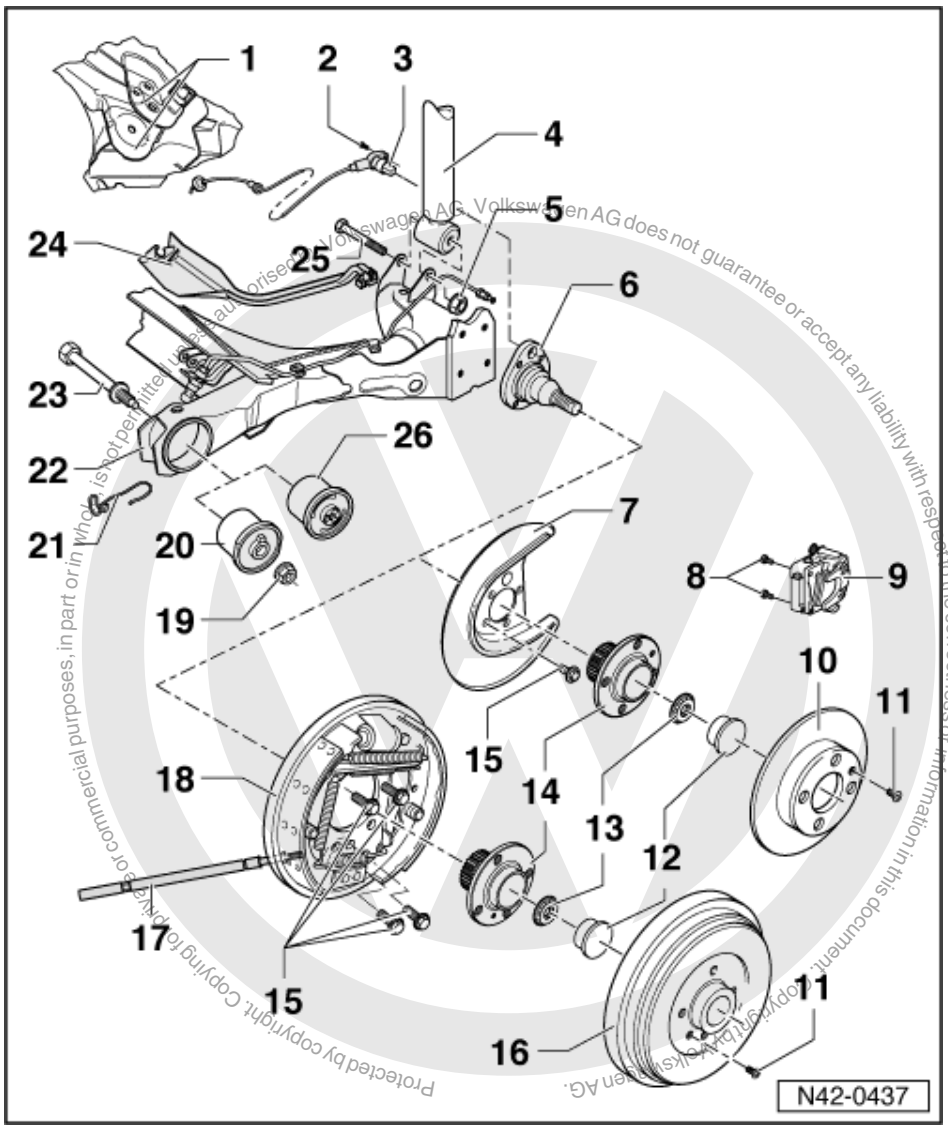

12 Dust cap

- Renew each time after removing
  A perfect seal is only achieved using a new dust cap.
  Only then is an optimum function and long service life guaranteed.

13 Self-locking 12-point nut, 175 Nm

- Renew each time after removing

14 Wheel hub with wheel bearings

The wheel bearing and wheel hub are installed together in a housing.

This wheel bearing/hub unit is maintenance and adjustment free. Adjusting and servicing is not possible!

15 Hexagon head bolt, 60 Nm

- Renew each time after removing

satelettronica

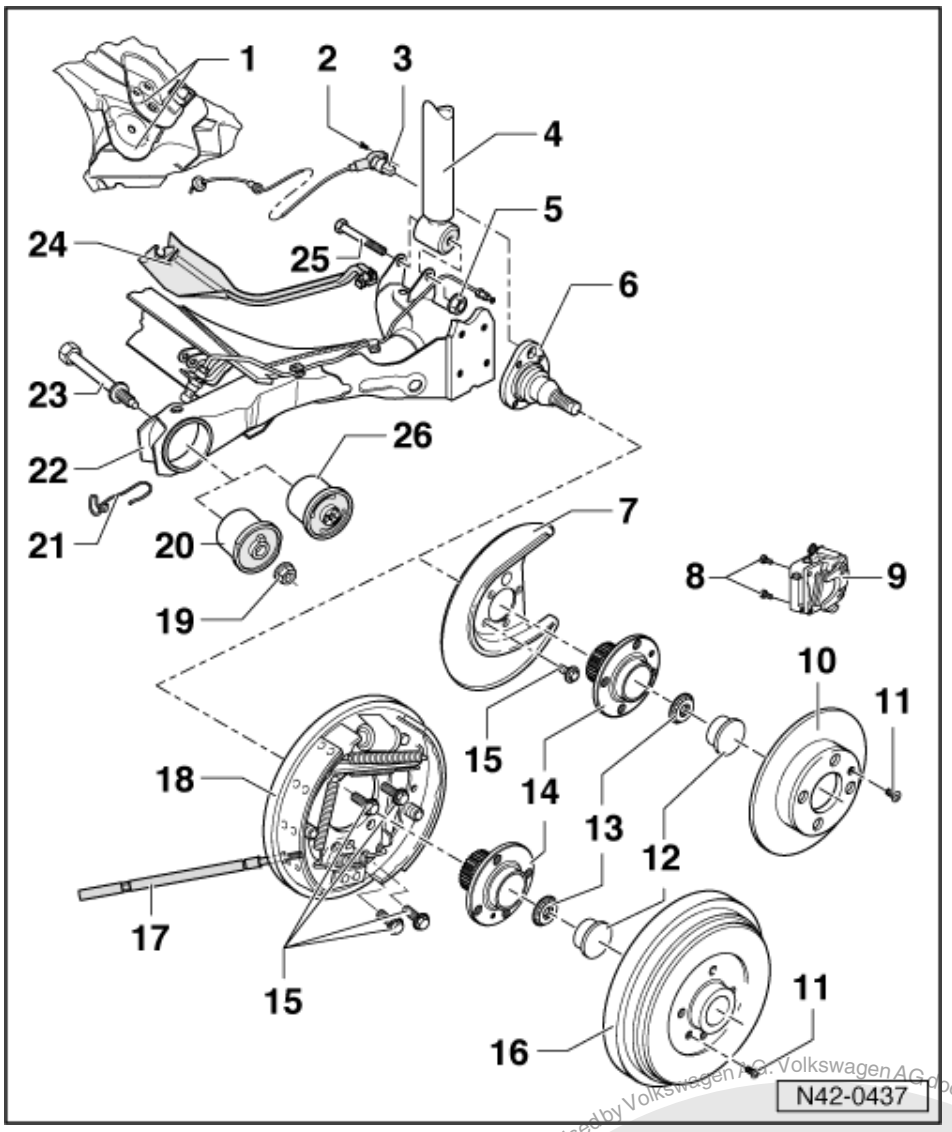

16 Brake drum

17 Handbrake cable

18 Back plate with brake shoes

19 Self-locking hexagon nut; 65 Nm

- When tightening the nut the axle beam must be in the horizontal position (unladen vehicle state)
- Renew each time after removing

20 Hydraulic bonded rubber mounting

Not supplied as a replacement part.
Mounting must be renewed if leaking
Install bonded rubber mounting =>item 26 as a replacement part.
Mixed installation is not permitted.

- Removing =>Page 136

satelettronica
Copyright by Volkswagen AG. Volkswagen AG does not guarantee or accept any liability with respect to the correctness of information in this document. Copying for private or commercial purposes, in part or in whole, is not permitted unless authorised by Volkswagen AG.

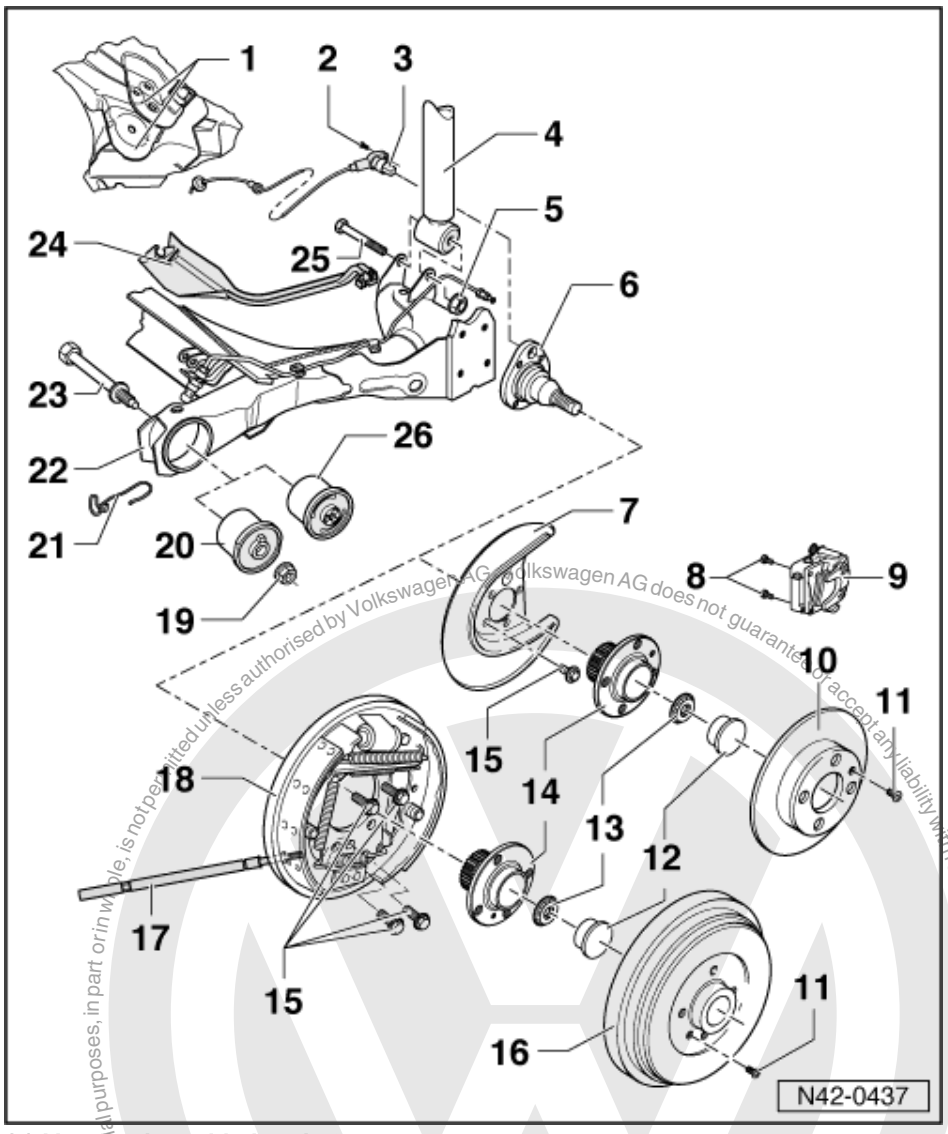

21 Handbrake cable bracket

22 Axle beam

- Stub axle contact surfaces and threaded holes are to be free of paint and dirt

23 Bolt

- Fit from centre of vehicle

24 Cable channel

- Only on vehicles with ABS

25 Bolt

26 Bonded rubber mounting

- Removing and installing =>Page 133

Protected by copyright. Copying for private or commercial purposes, in part or in whole, is not permitted unless authorised by Volkswagen AG. Volkswagen AG does not guarantee or accept any liability with respect to the correctness of information in this document. Copyright by Volkswagen AG.

satelettronica

4.5 - Removing and installing bonded rubber mounting, Polo Classic, Polo Estate> 09.99

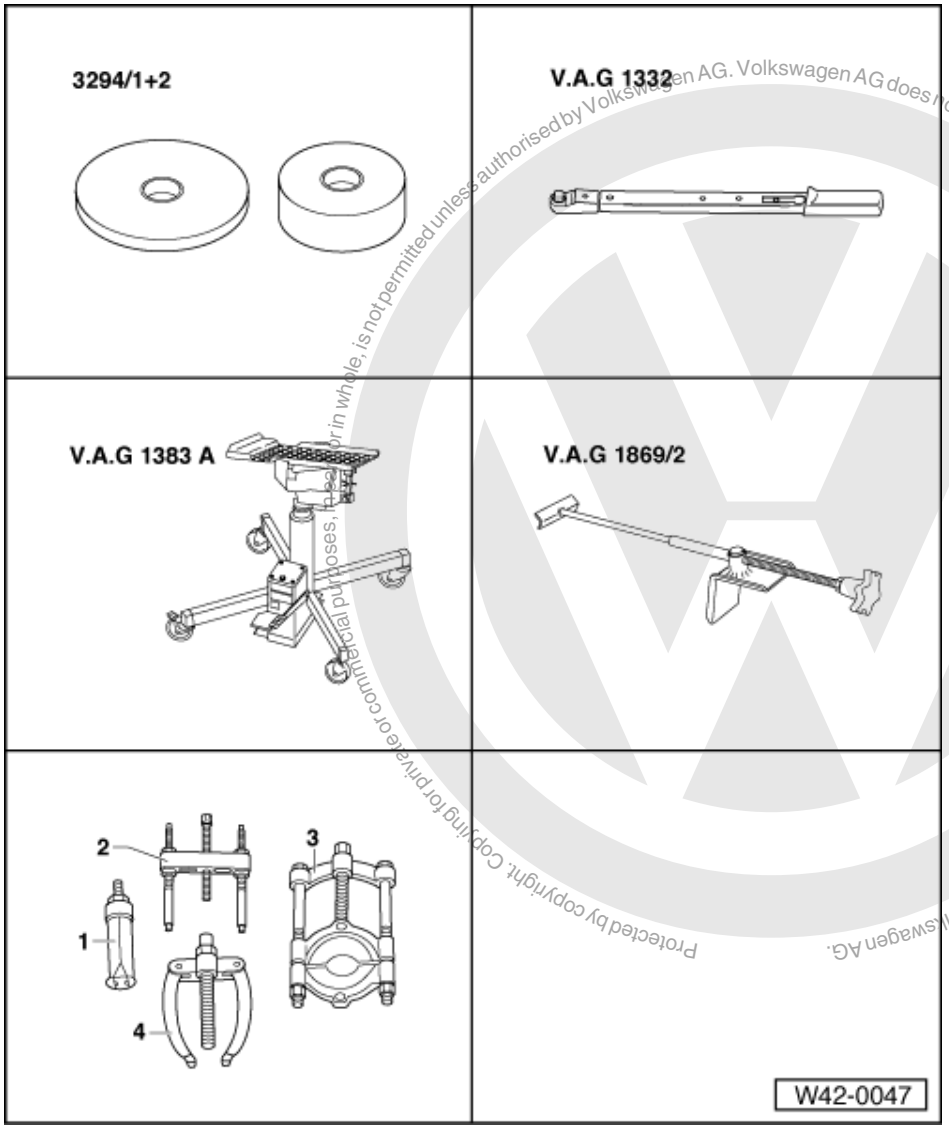

Protected by copyright. Copying for private or commercial purposes, either in whole or in part, is not permitted unless authorised by Volkswagen AG. Volkswagen AG does not guarantee or accept any liability with respect to the correctness of information in this document. Copyright by Volkswagen AG.

satelettronica

Special tools and workshop equipment required

- 3294/1 Thrust piece
- 3294/2 Thrust piece
- V.A.G 1332 Torque wrench
- V.A.G 1383 A Engine/gearbox jack
- V.A.G 1869/2 Brake pedal depressor
- 2 - Kukko 18/1 Pulling device
- 3 - Kukko 15/1, 17/1 Separating device

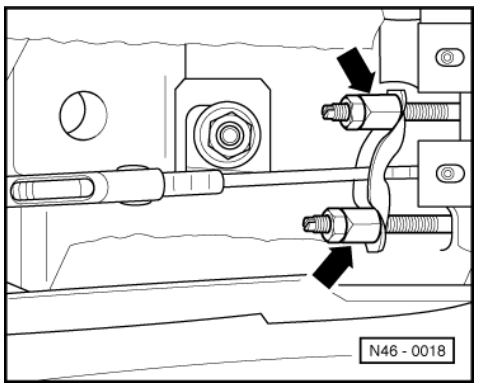

- Remove centre console,

=> General body repairs, Interior; Repair group 68; Compartments, covers and trims; Removing centre console Compartments, covers and trims Removing centre console

- Release handbrake.
- -> Unscrew adjustment nut -arrow- so that the handbrake cable can be unhooked from the compensator.
- Fit brake pedal loading device V.A.G 1869/2.

This will prevent the brake fluid draining from the brake pipes and the ABS hydraulic unit!

- Fold rear seat bench forwards.

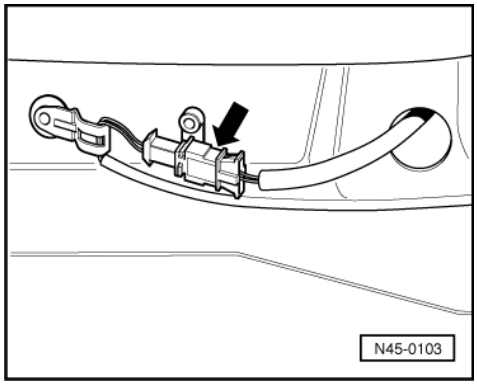

- -> Separate speed sensor wiring connector -arrow-.
- Raise vehicle.

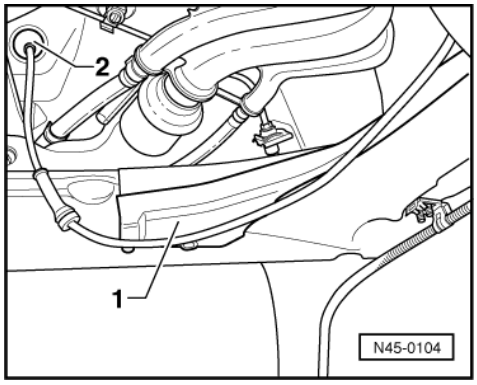

- -> Unclip grommet -2- and pull speed sensor wiring out of vehicle interior.

Protected by copyright. Copying for private or commercial purposes, in part or in whole, is not permitted unless authorised by Volkswagen AG. Volkswagen AG does not guarantee or accept any liability with respect to the correctness of information in this document. Copyright by Volkswagen AG.
satelettronica

Protected by copyright. Copying for private or commercial purposes, in part or in whole, is not permitted unless authorised by Volkswagen AG. Volkswagen AG does not guarantee or accept any liability with respect to the correctness of information in this document. Copyright by Volkswagen AG.

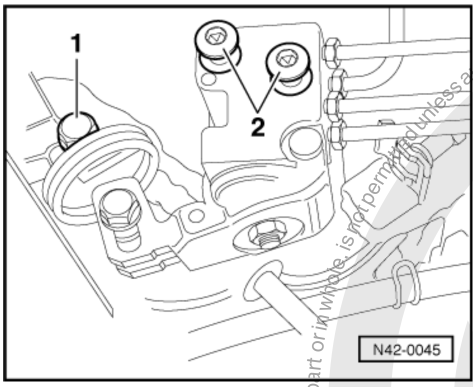

- -> Remove bolts -1- and -2- for brake pressure regulator (only on vehicles without ABS).

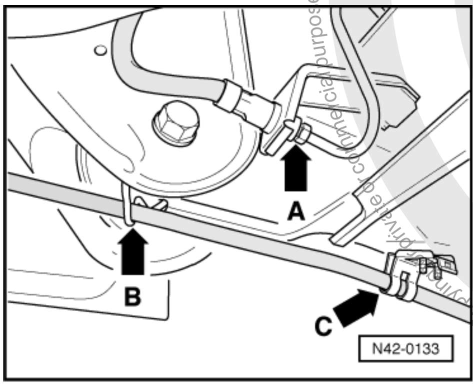

- -> Disconnect brake pipes (arrow A).
- Detach handbrake cables from the retainers (arrow B and arrow C).
- Place engine/gearbox jack V.A.G 1383 A in position.
- Remove bolts for rear axle beam.

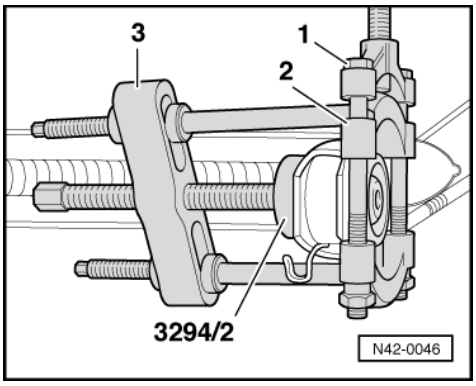

- -> Press out bonded rubber mounting

1 - Kukko 17 - 1
2 - Kukko 15 - 1
3 - Bridge, e.g. Kukko 18/1

satelettronica

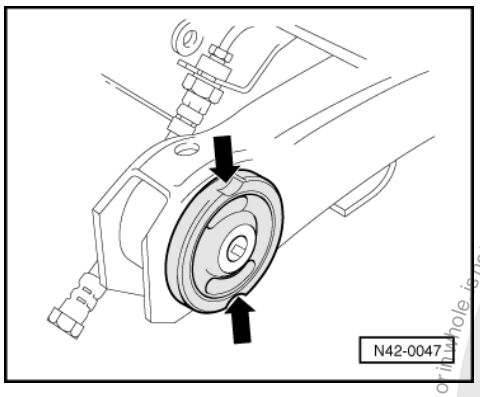

Installation position of bonded rubber mounting in rear axle beam

-> The recesses (arrows) point upwards/downwards

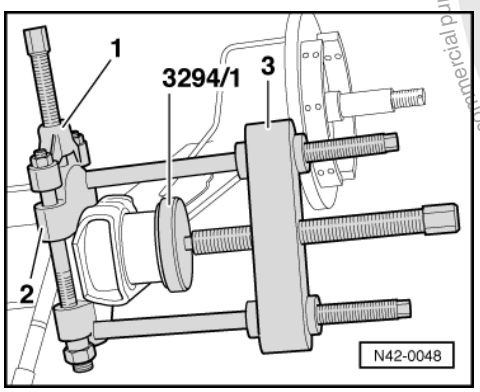

- -> Pressing rubber bonded mounting in

  1 - Kukko 17 - 1
  2 - Kukko 15 - 1
  3 - Bridge, e.g. Kukko 18/1

- Install rear axle and brake pressure regulator.
- Bleeding brake system

=> Brake systems; repair group 47 Booklet, Bleeding brake system, vehicles with or without ABS

Tightening torques:	
Mounting bracket to rear axle Use new bolts and nuts! (vehicle resting on wheels)	65 Nm

Protected by copyright. Copying for private or commercial purposes, in part or in whole, is not permitted unless authorised by Volkswagen AG. Volkswagen AG does not guarantee or accept any liability with respect to the correctness of information in this document. Copyright by Volkswagen AG.
satelettronica

4.6 - Removing and installing, Polo Classic, Polo Estate 10.99 >

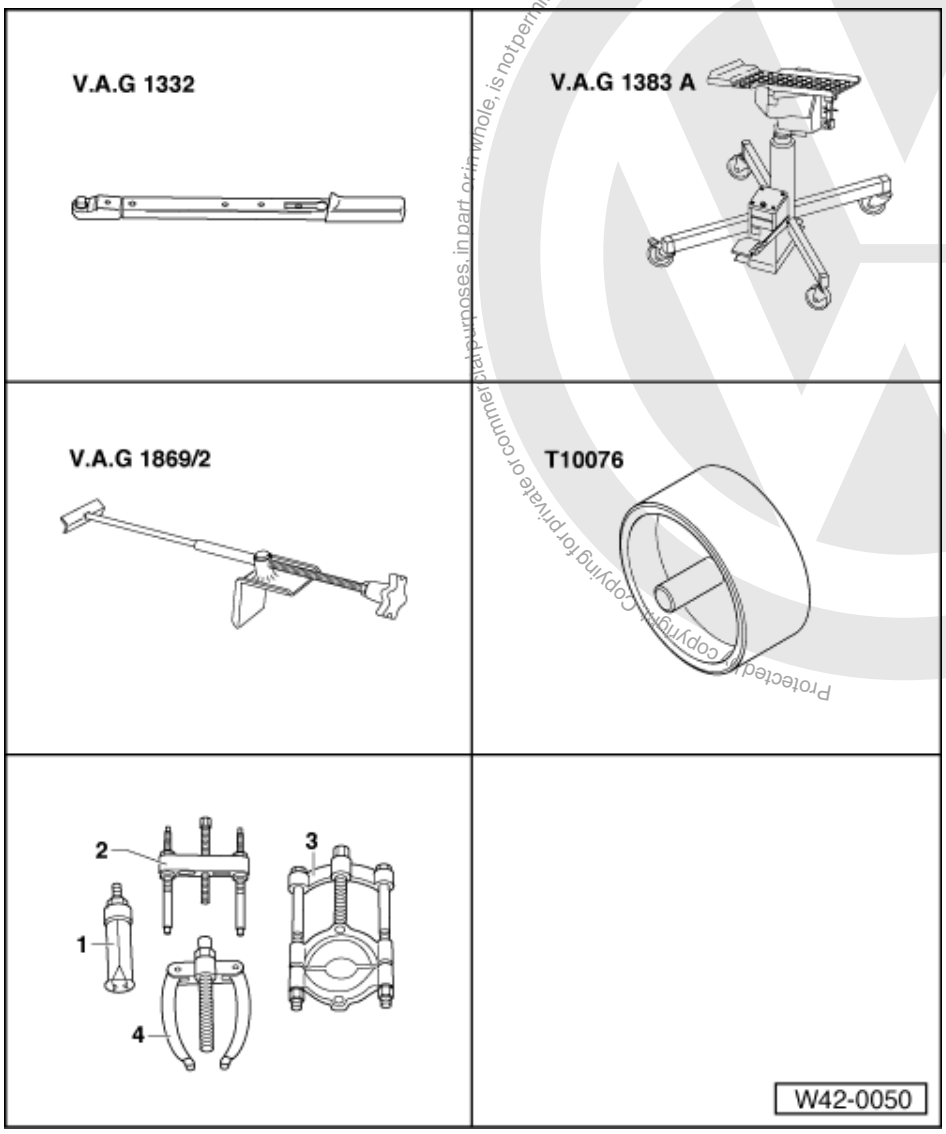

Special tools and workshop equipment required

- V.A.G 1332 Torque wrench
- V.A.G 1383 A Engine/gearbox jack
- V.A.G 1869/2 Brake pedal depressor
- T10076 Thrust piece
- 2 - Kukko 18/1 Pulling device
- 3 - Kukko 15/1, 17/1 Separating device

Protected by copyright. Copying for private or commercial purposes, in part or in whole, is not permitted unless authorised by Volkswagen AG. Volkswagen AG does not guarantee or accept any liability with respect to the correctness of information in this document. Copyright by Volkswagen AG.
satelettronica

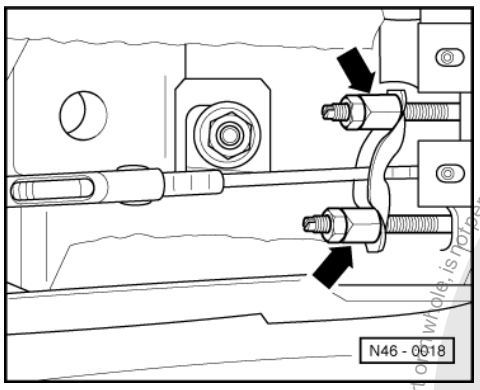

- Remove centre console,

=> General body repairs, Interior; Repair group 68; Compartments, covers and trims; Removing centre console Compartments, covers and trims Removing centre console

- Release handbrake.
- -> Unscrew adjustment nut -arrow- so that the handbrake cable can be unhooked from the compensator.
- Fit brake pedal loading device V.A.G 1869/2.

This will prevent the brake fluid draining from the brake pipes and the ABS hydraulic unit!

- Fold rear seat bench forwards.

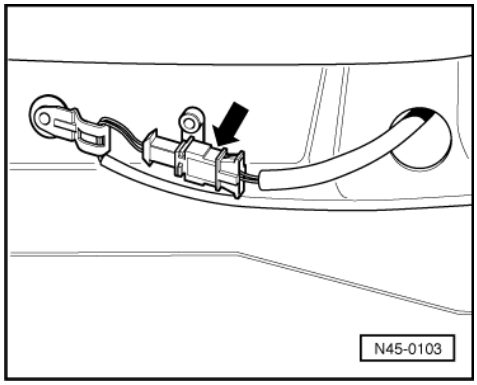

- -> Separate speed sensor wiring connector -arrow-.
- Raise vehicle.

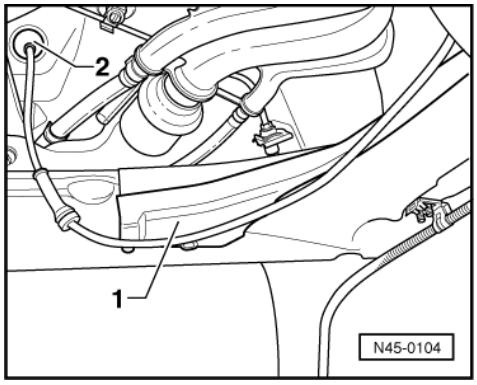

- -> Unclip grommet -2- and pull speed sensor wiring out of vehicle interior.

Protected by copyright. Copying for private or commercial purposes, in part or in whole, is not permitted unless authorised by Volkswagen AG. Volkswagen AG does not guarantee or accept any liability with respect to the correctness of information in this document. Copyright by Volkswagen AG.
satelettronica

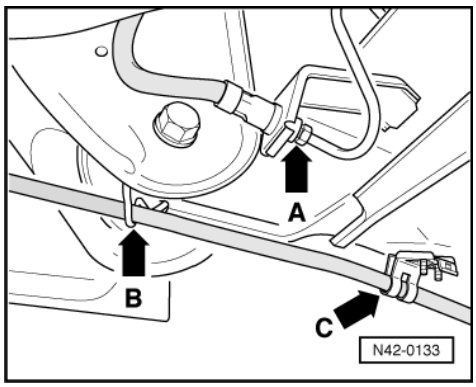

- -> Disconnect brake pipes (arrow A).
- Detach handbrake cables from the retainers (arrow B and arrow C).
- Place engine/gearbox jack V.A.G 1383 A in position.
- Remove bolts for rear axle beam.

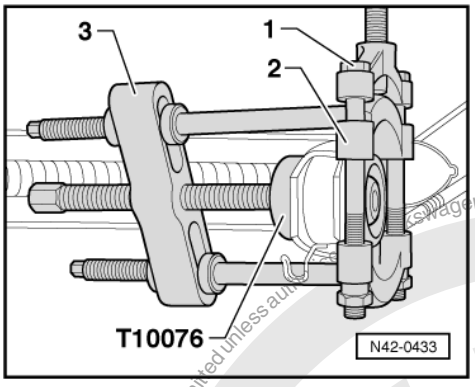

- -> Press out bonded rubber mounting

1 - Kukko 17 - 1
2 - Kukko 15 - 1
3 - Bridge, e.g. Kukko 18/1

Installation position of bonded rubber mounting in rear axle beam

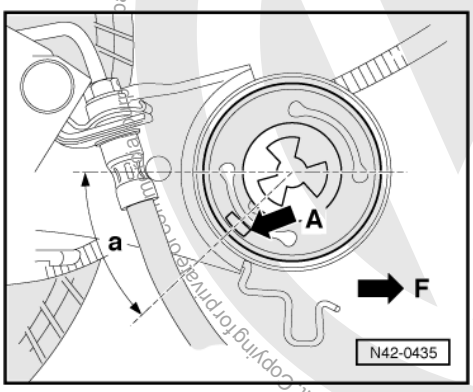

-> Left bonded rubber bearing is shown in figure.

Rubber lugs -arrow A- always points opposite direction of travel.

a - 45°
F - Direction of travel

satelettronica
Protected by copyright. Copyright Copying for private and commercial purposes, in whole or in part, is not permitted unless authorised by Volkswagen AG. Volkswagen AG does not guarantee or accept any liability with respect to the correctness of information in this document. Copyright by Volkswagen AG.

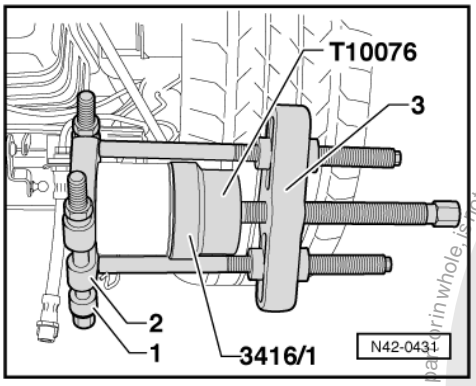

- -> Pressing rubber bonded mounting in

  1 - Kukko 17 - 1
  2 - Kukko 15 - 1
  3 - Bridge, e.g. Kukko 18/1

- Install rear axle.
- Bleeding brake system

=> Brake systems; repair group 47 Booklet, Bleeding brake system, vehicles with or without ABS

Tightening torques:	
Mounting bracket to rear axle Use new bolts and nuts! (vehicle resting on wheels)	65 Nm

4.7 - Removing hydraulic rubber bonded mounting, Polo Classic, Polo Estate 10.99 >

For technical reasons, the repair details for this subject were not available for inclusion in this repair manual prior to the publication deadline. They will be published in a technical bulletin at a later date.

Protected by copyright. Copying for private or commercial purposes, in part or in whole, is not permitted unless authorised by Volkswagen AG. Volkswagen AG does not guarantee or accept any liability with respect to the correctness of information in this document. Copyright by Volkswagen AG.
satelettronica

4.8 - Dismantling and assembling suspension strut, Polo Classic, Polo Estate

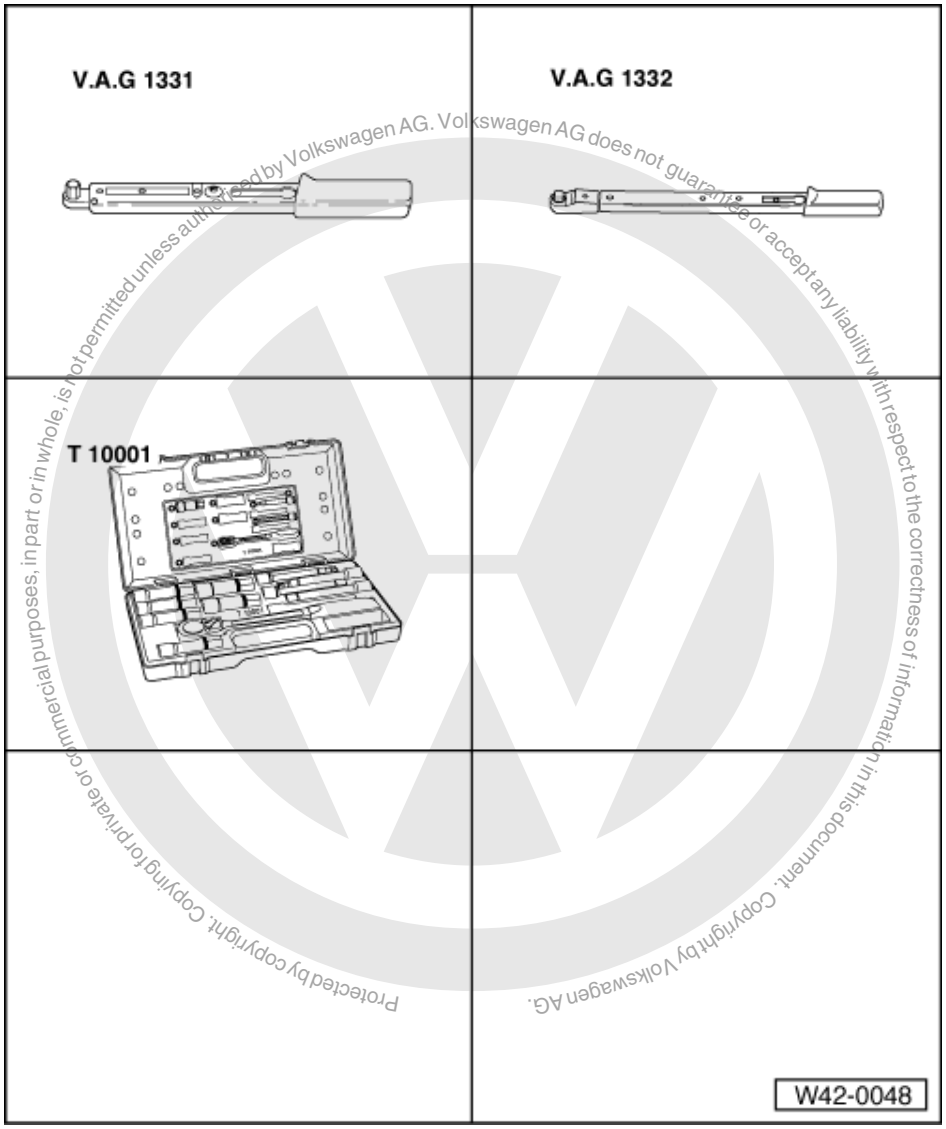

Protected by copyright. Copying for private or commercial purposes, in part or in whole, is not permitted unless authorised by Volkswagen AG. Volkswagen AG does not guarantee or accept any liability with respect to the correctness of information in this document. Copyright by Volkswagen AG.

satelettronica

Special tools and workshop equipment required

- V.A.G 1331 Torque wrench
- V.A.G 1332 Torque wrench
- T10001 Special tools for struts/shock absorbers

Removing

Only Polo Classic

- Remove rear shelf.

=> General body repairs, Interior; Repair group 70; Load and luggage compartment trim; Removing and installing rear shelf (Polo Classic) Load and luggage compartment trim Removing and installing rear shelf (Polo Classic)

Only Polo Estate

- Remove side trim in luggage compartment.

=> General body repairs, Interior; Repair group 70; Load and luggage compartment trim; Removing and installing luggage compartment side trim (Polo Estate) Load and luggage compartment trim Removing and installing luggage compartment side trim (Polo Estate)

Continued for all vehicles

- Remove suspension strut cover.

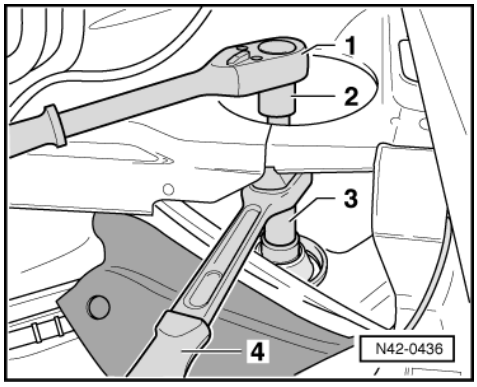

- Unbolt dished washer.
- -> With the vehicle standing on its wheels, unscrew upper shock absorber mounting from inside luggage compartment.

1 - Commercially available ratchet handle
3 - T 10001/10
3 - T 10001/11
5 - T 10001/1

- Raise vehicle to working height.

- To remove the left suspension strut, the rear silencer must be lowered.

=> Repair group 26; Removing and installing parts of exhaust system. Removing and installing parts of exhaust system.

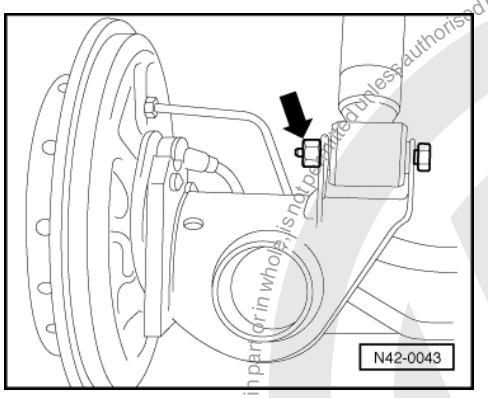

- -> Remove nut -arrow- from hexagon bolt for shock absorber at rear axle.
- Remove hexagon bolt.
- Take out shock absorber.

Installing

Install in reverse order.

Tightening torques:	
Shock absorber to rear axle	55 Nm
Suspension strut to body	25 Nm

Protected by copyright. Copying for private or commercial purposes, in part or in whole, is not permitted unless authorised by Volkswagen AG. Volkswagen AG does not guarantee or accept any liability with respect to the correctness of information in this document. Copyright by Volkswagen AG.
satelettronica

Tightening torques:	
Dished washer to suspension strut	15 Nm

4.9 - Dismantling and assembling suspension strut, Polo Classic, Polo Estate

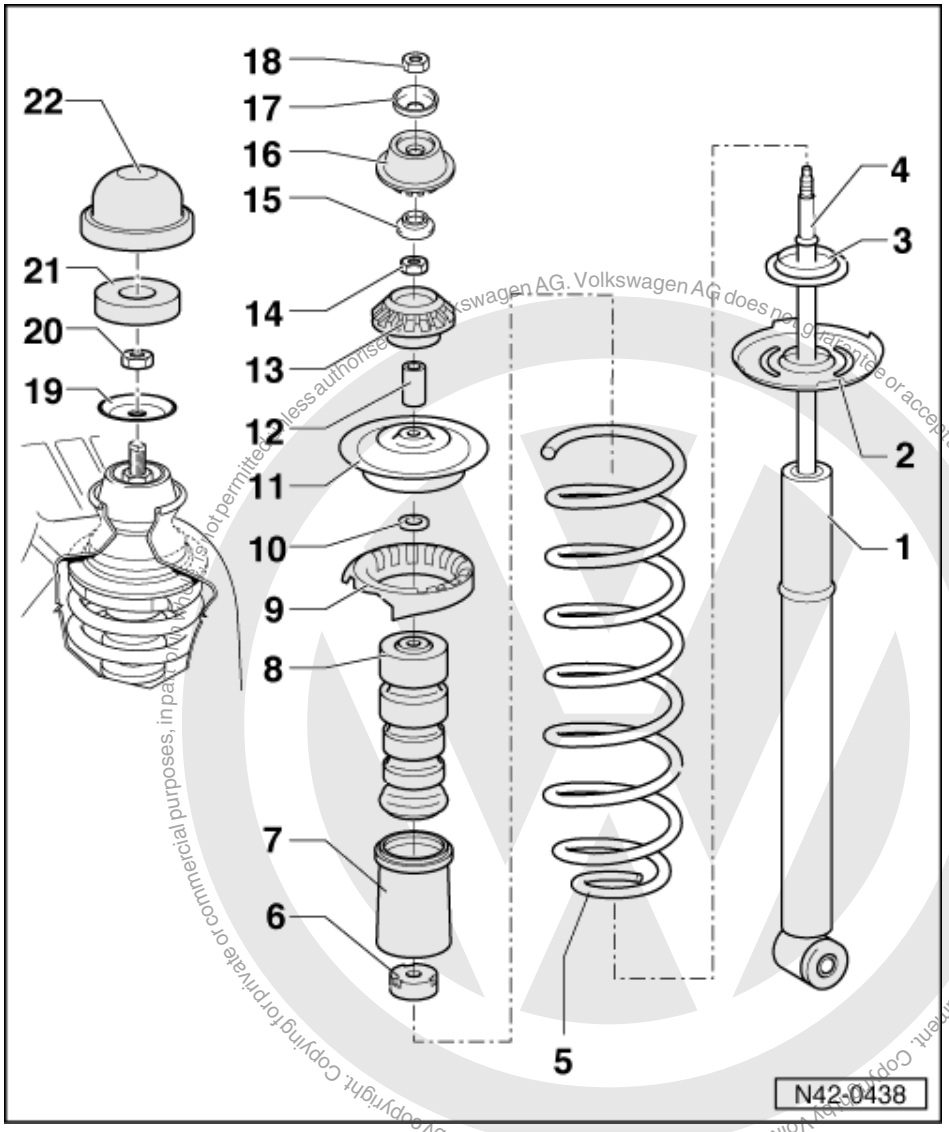

1 Shock absorber
- Can be renewed individually
- Removing and installing
- Allocation

=> Replacement parts catalogue

- Disposal

=> Special information; Running gear No.2; Environmentally acceptable and economical disposal of oil-filled components

- Checking shock absorber for leaks and noises

=> Special information; Running gear No.17; Leaking shock absorbers, noisy shock absorbers

satelettronica

2 Lower spring plate
3 Packing
4 Piston rod with circlip

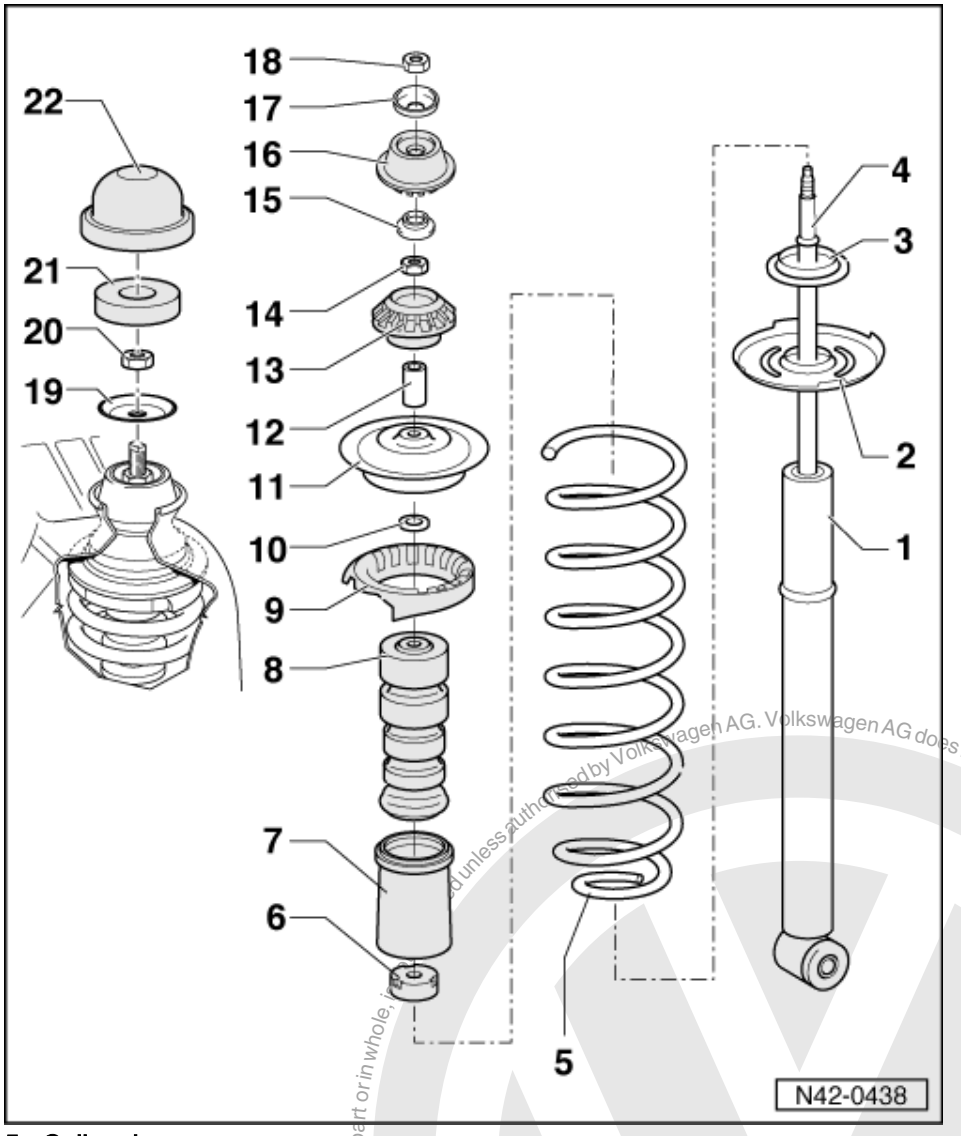

5 Coil spring
- Can be removed and installed without spring tensioning device
- Allocation

=> Replacement parts catalogue
6 Protective cap
7 Protective tube
8 Stop buffer
9 Spring seat
- Installation position => Fig.1

10 Washer
11 Upper spring plate
12 Spacer tube
13 Lower mounting ring
- Rubber item

14 Nut, 15 Nm

Protected by copyright. Copying for private or commercial purposes, in part or in whole, is not permitted unless authorised by Volkswagen AG. Volkswagen AG does not guarantee or accept any liability with respect to the correctness of information in this document. Copyright by Volkswagen AG.
satelettronica

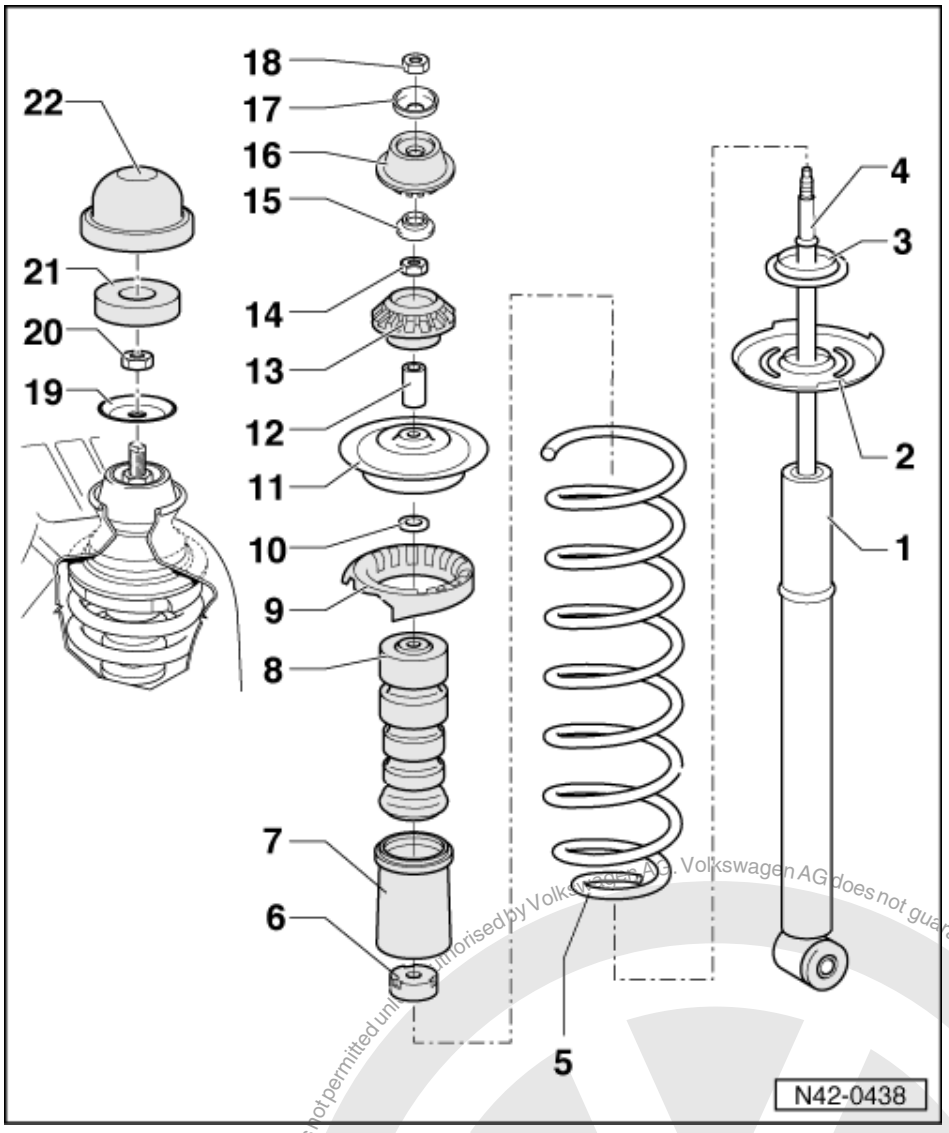

15 Cover (small)
16 Upper mounting ring (rubber)
17 Cover (large)
18 Nut; 25 Nm
19 Dished washer
20 Nut, 15 Nm
21 Insulation
22 Cover

Protected by copyright. Copying for private or commercial purposes, in part or in whole, is not permitted unless authorised by Volkswagen AG. Volkswagen AG does not guarantee or accept any liability with respect to the correctness of information in this document. Copyright by Volkswagen AG.
satelettronica

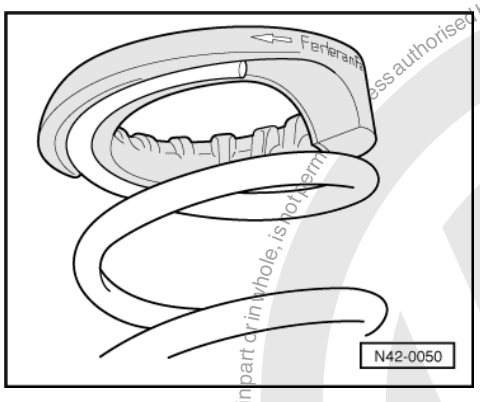

-> Fig.1 Installation position of spring seat

5 - Servicing wheel bearings, Polo Classic, Polo Estate >09.99

5.1 - Servicing wheel bearings, Polo Classic, Polo Estate >09.99

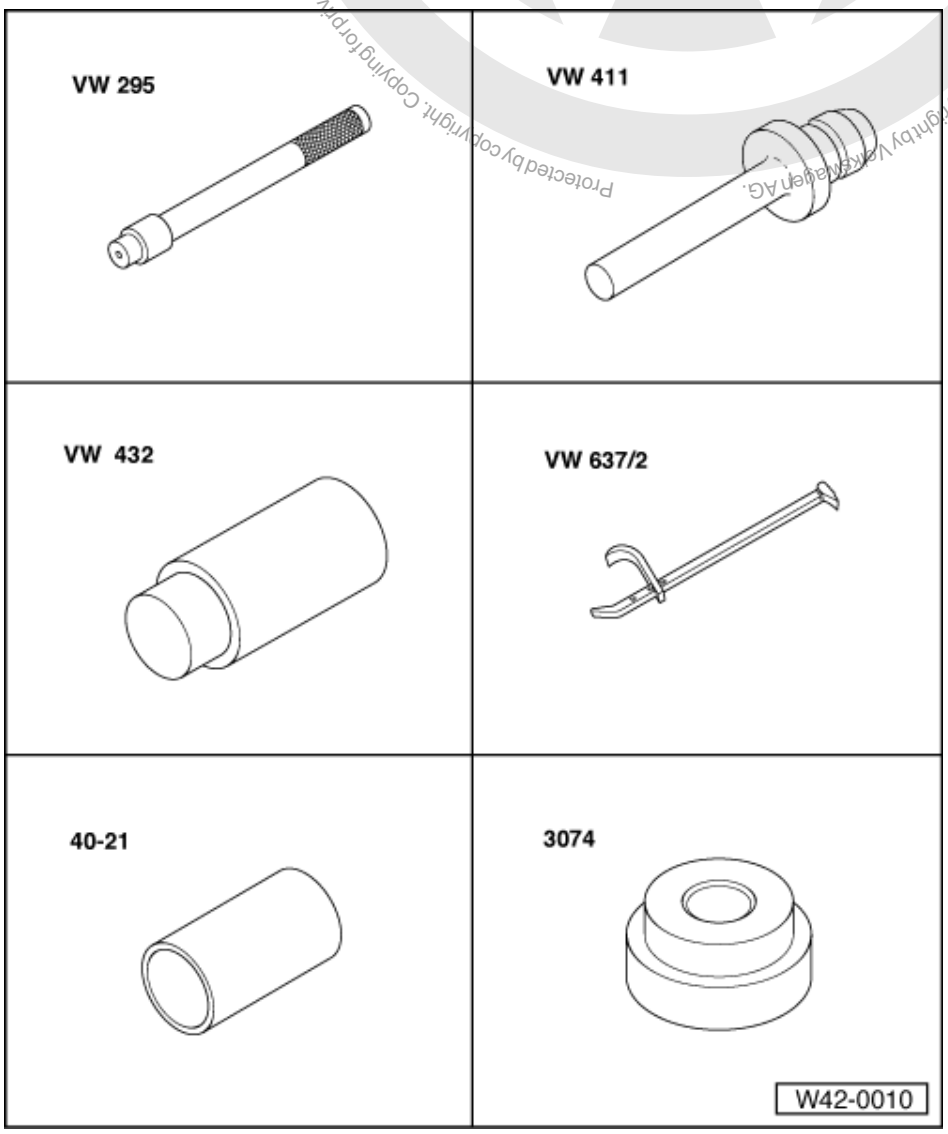

Protected by copyright. Copying for private or commercial purposes, in part or in whole, is not permitted unless authorised by Volkswagen AG. Volkswagen AG does not guarantee or accept any liability with respect to the correctness of information in this document. Copyright by Volkswagen AG.

satelettronica

Special tools and workshop equipment required

- VW 295 Drift
- VW 411 Press tool
- VW 432 Press piece
- VW 637/2 Hub cap puller
- 40-21 Press tool
- 3074 Press disc

5.2 - Assembly overview, servicing wheel bearings, Polo Classic, Polo Estate

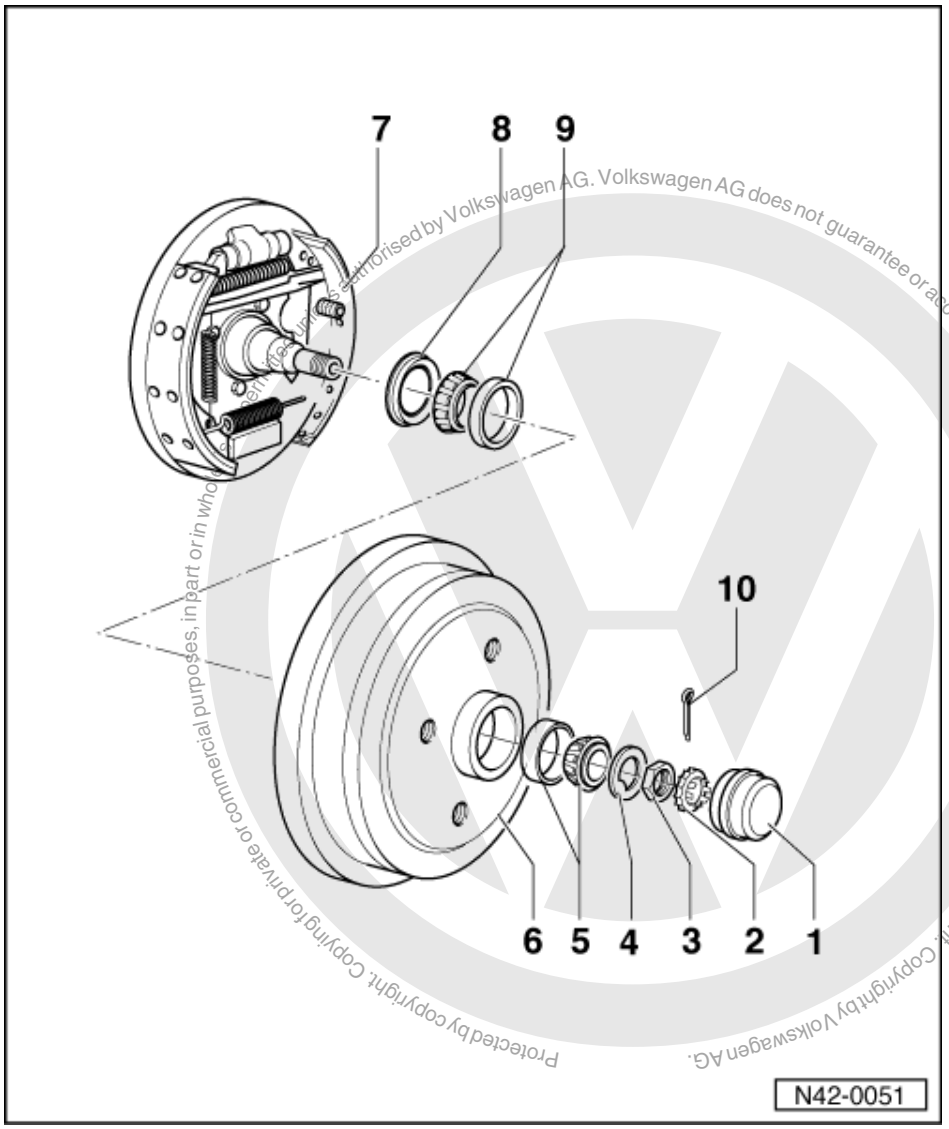

Protected by copyright. Copying for private or commercial purposes, in part or in whole, is not authorised by Volkswagen AG. Volkswagen AG does not guarantee or accept any liability with respect to the correctness of information in this document. Copyright by Volkswagen AG.

satelettronica

Notes:

Careful sealing, absolute cleanliness and precise adjustment are prerequisites for long wheel bearing service life. Therefore note the following points:

- Install oil seal and grease cap as shown.
- Only reinstall clean bearings, do not wash bearings.

- Adjust wheel bearing play carefully.

1 Grease cap
- Pressing off => Fig. 1 and 2
- Driving in => Fig. 3

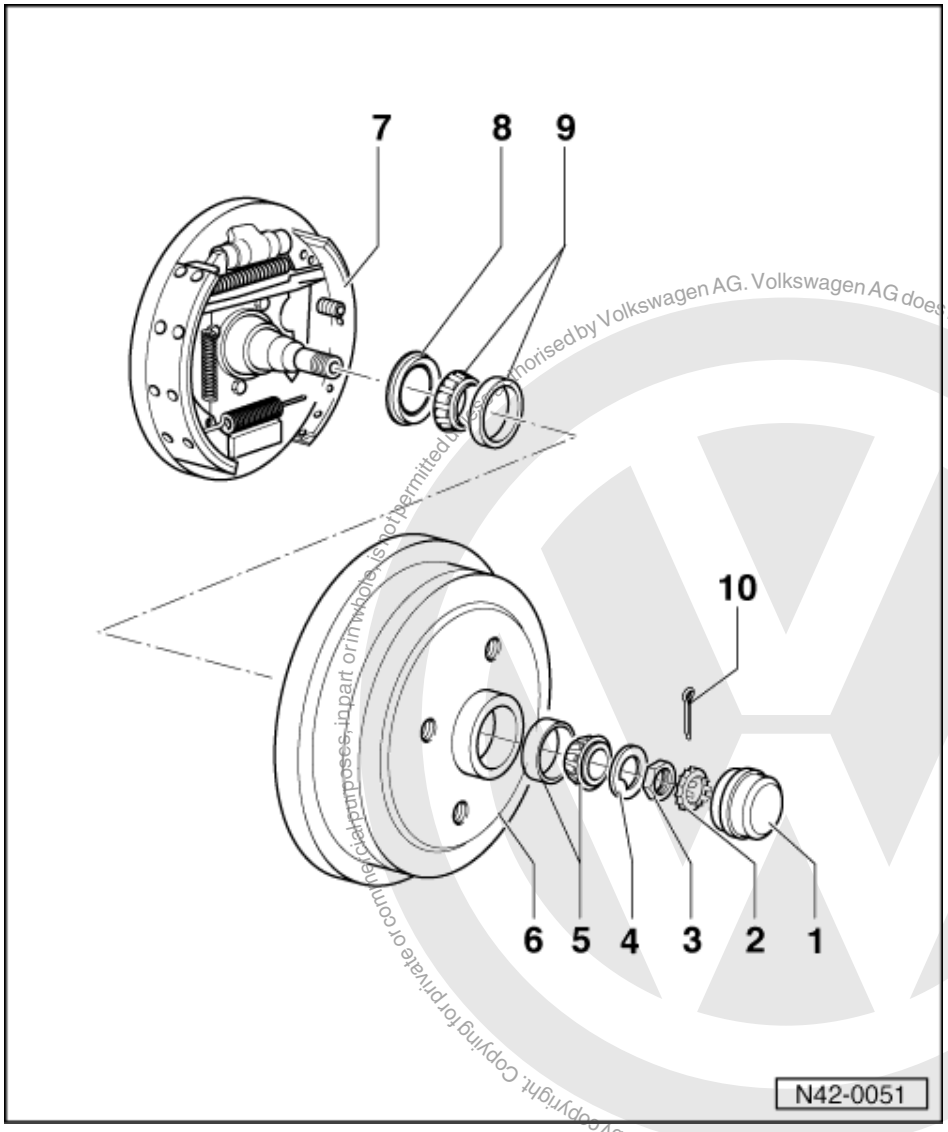

2 Locking ring
3 Hexagon nut
- Adjusting wheel bearing play => Fig. 4

4 Thrust washer
5 Outer wheel bearing
- Drive out outer race with copper drift
- Pressing in => Fig. 6

6 Brake drum
- Before removing release brake shoe adjustment through wheel bolt hole => Fig. 5
- Fill hub with multi-purpose grease before installing
- Renew

7 Brake backplate
- Bolt together with stub axle onto rear axle

Protected by copyright. Copying for private or commercial purposes, in part or in whole, is not permitted unless authorised by Volkswagen AG. Volkswagen AG does not guarantee or accept any liability with respect to the correctness of information in this document. Copyright by Volkswagen AG.
satelettronica

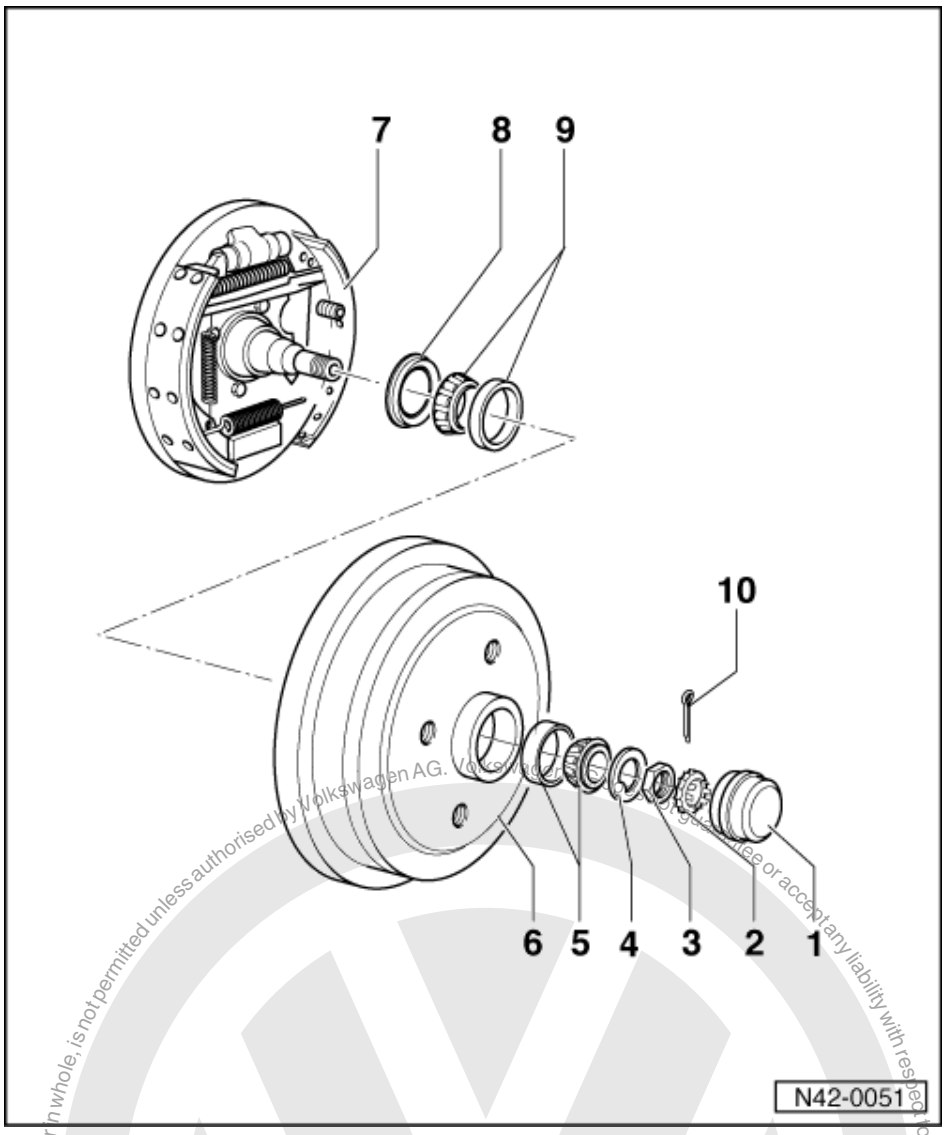

8 Oil seal
- Fill between sealing lips with multi-purpose grease.
- Driving in =>Fig.8

9 Inner wheel bearing
- Drive out outer race with copper drift
- Pressing in =>Fig. 7

10 Split pin

Protected by copyright. Copying for private or commercial purposes, in part or in whole, is not permitted unless authorised by Volkswagen AG. Volkswagen AG does not guarantee or accept any liability with respect to the correctness of information in this document. Copyright by Volkswagen AG.
satelettronica

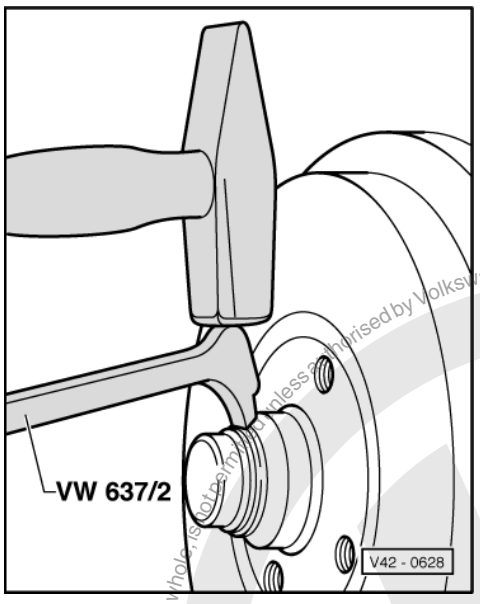

-> Fig.1 Pressing off grease cap

Loosen grease cap from seat by tapping lightly on the claw.

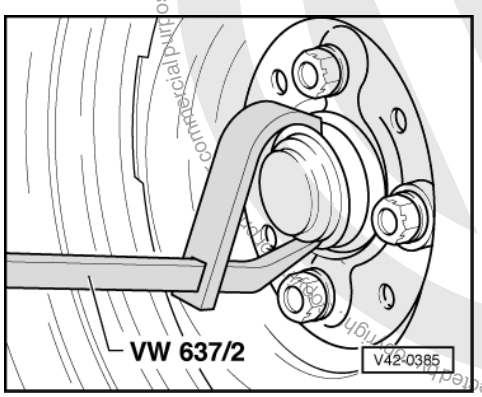

-> Fig.2 Pressing off grease cap

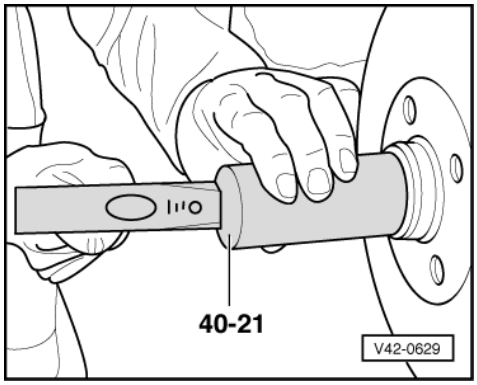

-> Fig.3 Driving in grease cap

Notes:

- Always renew grease caps.

Protected by copyright. Copyright by Volkswagen AG. Volkswagen AG does not guarantee or accept any liability with respect to the correctness of information in this document. Commercial purposes in part or in whole is not permitted unless authorised by Volkswagen AG.
satelettronica

- Damaged grease caps allow moisture to penetrate, so always use the tool illustrated.

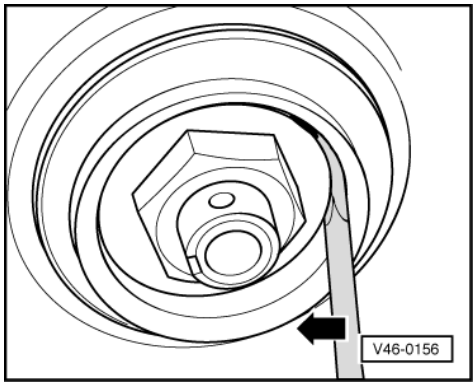

-> Fig.4 Adjusting wheel bearing play

Note:

Using a screwdriver it must be possible to move the thrust washer by finger pressure (without leverage).

- Secure with locking ring and new split pin.

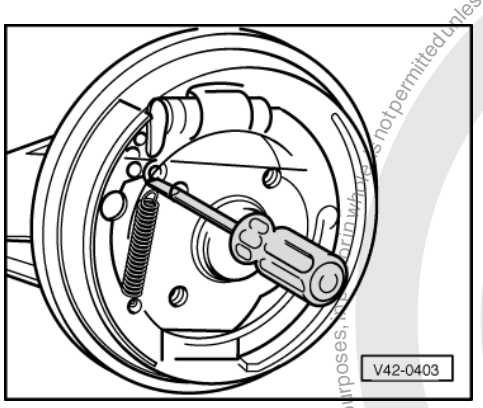

-> Fig.5 Releasing brake shoe adjustment

- Insert a screwdriver through a hole in the brake drum and push the wedge upwards.

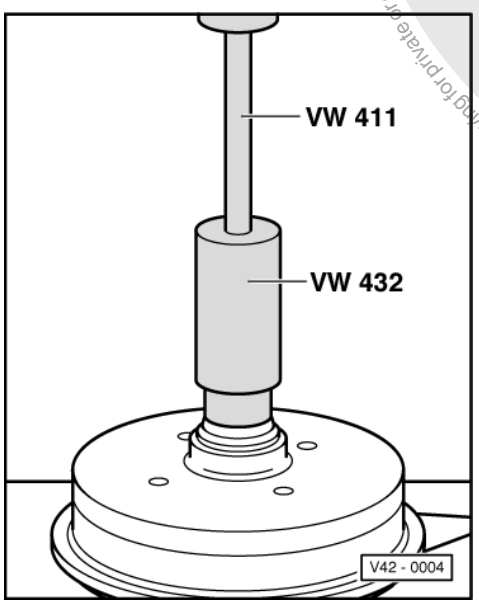

Protected by copyright. Copying for private or commercial purposes, in whole or in part, is not permitted unless authorised by Volkswagen AG. Volkswagen AG does not guarantee or accept any liability with respect to the correctness of information in this document. Copyright by Volkswagen AG.
satelettronica

-> Fig.6 Pressing in outer wheel bearing outer race

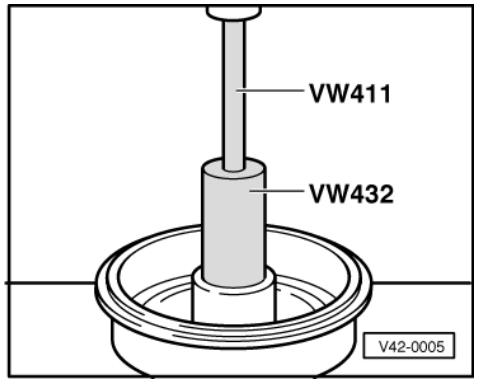

-> Fig.7 Pressing in inner wheel bearing outer race

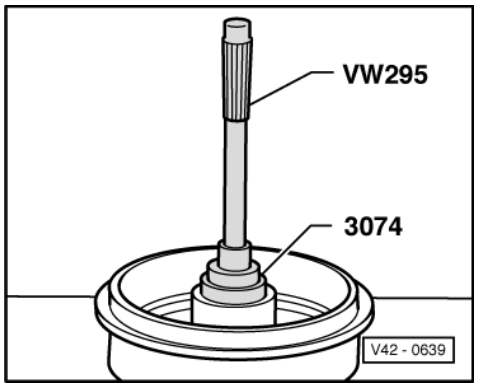

Protected by copyright. Copying for private or commercial purposes, in part or in whole, is not permitted unless authorised by Volkswagen AG. Volkswagen AG does not guarantee or accept any liability with respect to the correctness of information in this document. Copyright by Volkswagen AG.
satelettronica

-> Fig.8 Driving in oil seal

6 - Servicing wheel bearings, Polo Classic, Polo Estate > 10.99

6.1 - Servicing wheel bearings, Polo Classic, Polo Estate > 10.99

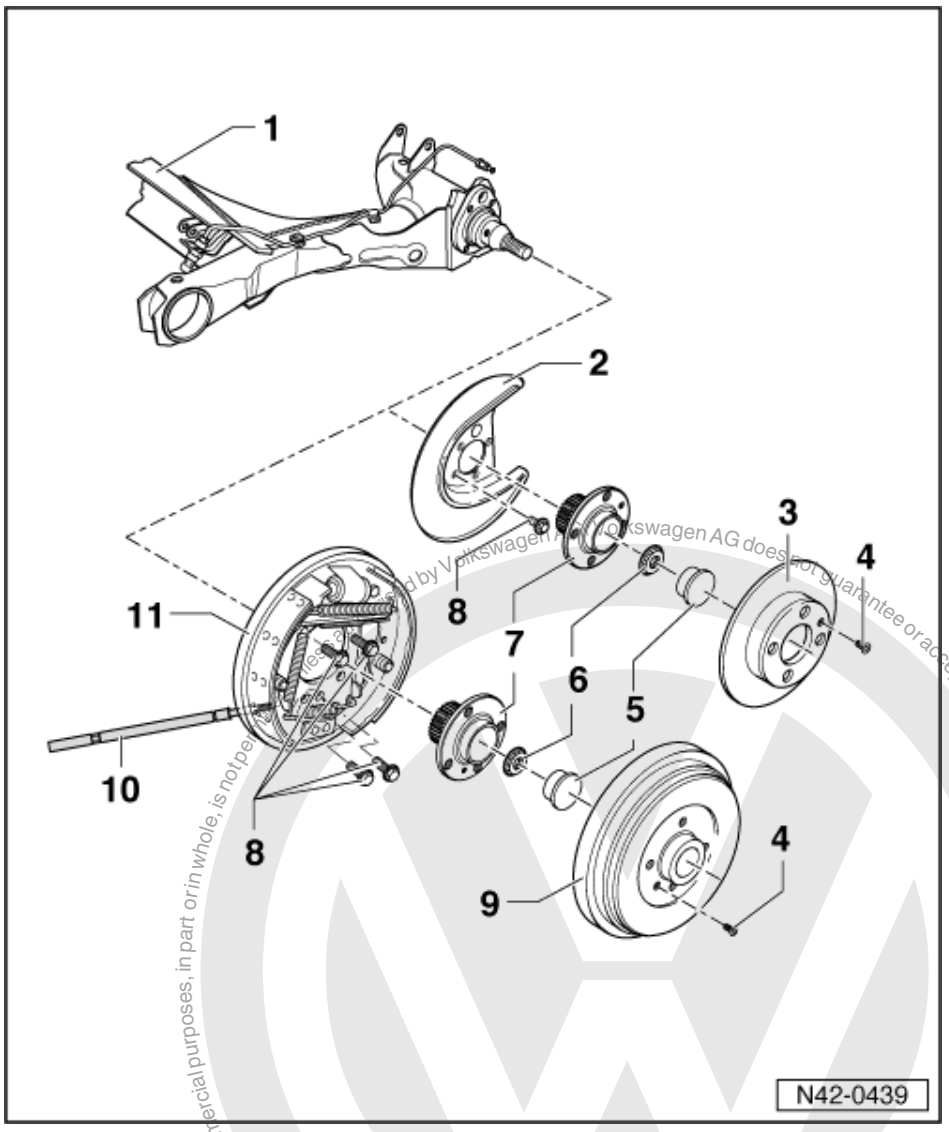

6.2 - Assembly overview, servicing wheel bearings, Polo Classic, Polo Estate

Note:

Welding and straightening on axle beam and stub axle is not permissible.

1 Axle beam
2 Splash plate
3 Brake disc
4 Cross-head screw

satelettronica

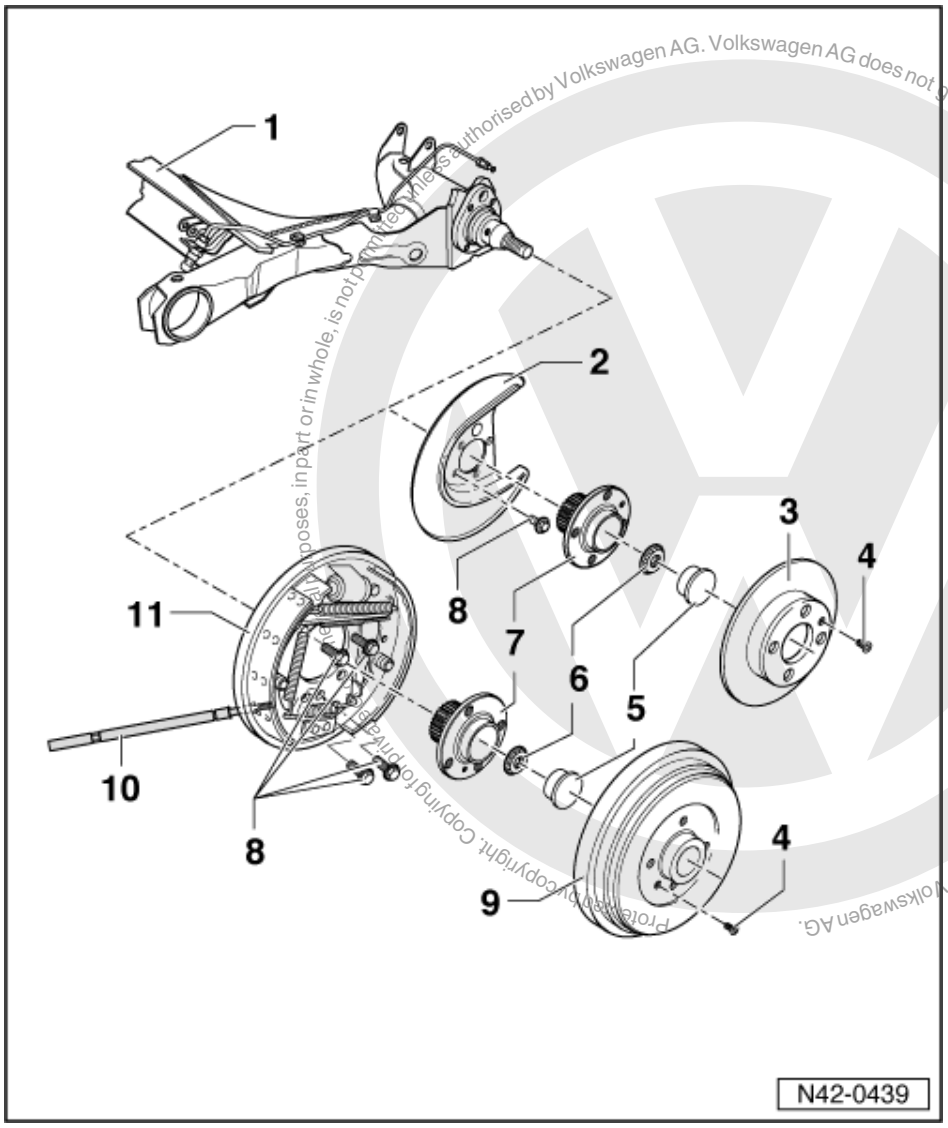

5 Dust cap
- Renew each time after removing
  A perfect seal is only achieved using a new dust cap.
  Only then is an optimum function and long service life guaranteed.
- Pressing off and driving in => from Page 152

6 Self-locking 12-point nut, 175 Nm
- Renew each time after removing

7 Wheel hub with wheel bearings

The wheel bearing and wheel hub are installed together in a housing.

This wheel bearing/hub unit is maintenance and adjustment free. Adjusting and servicing is not possible!

satelettronica

Volkswagen AG. Volkswagen AG does not guarantee or accept any liability with respect to the correctness of information in this document. Copyright by Volkswagen AG. Protected by copyright. Copying for private or commercial purposes, in part or in whole, is not permitted unless authorised by Volkswagen AG.

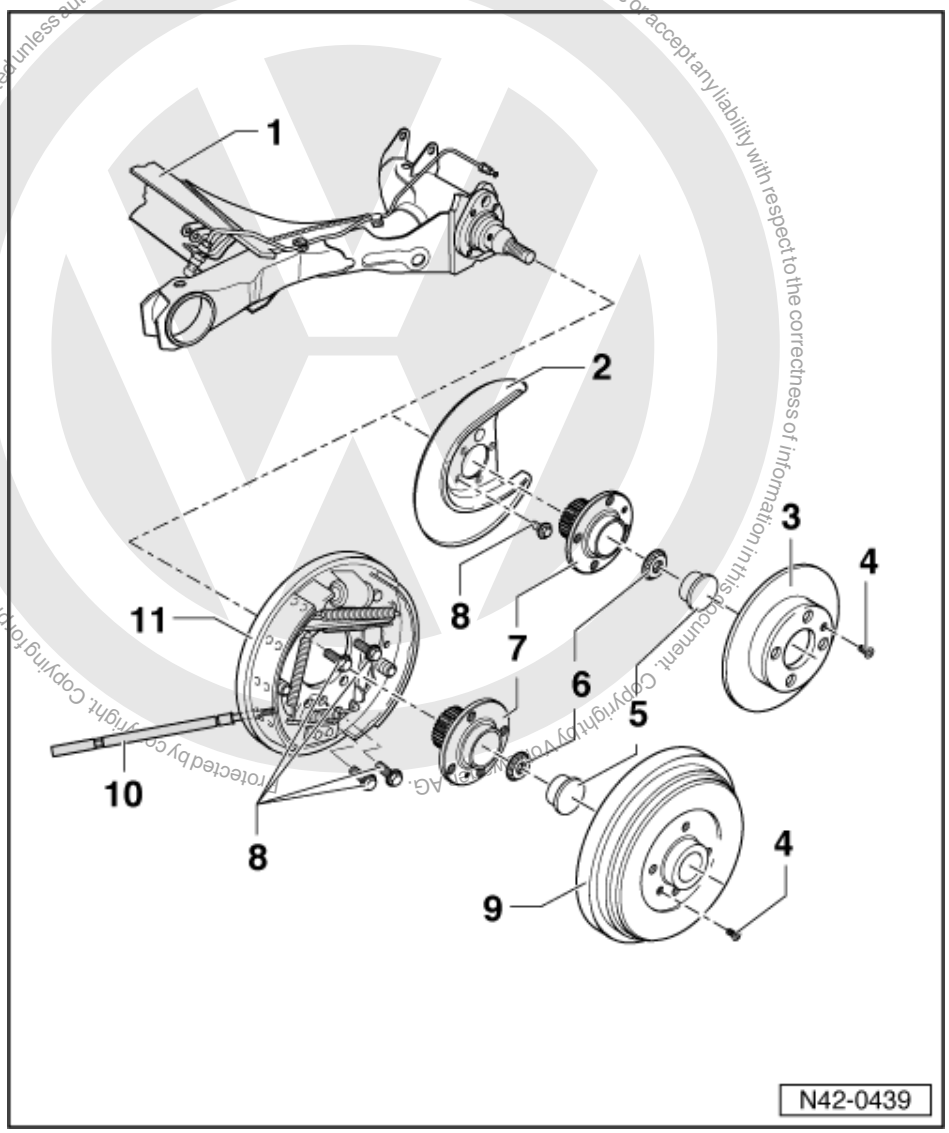

8 Hexagon head bolt, 60 Nm
- Renew each time after removing

9 Brake drum

10 Handbrake cable

11 Back plate with brake shoes

satelettronica

6.3 - Removing and installing wheel bearing/hub unit on vehicles with drum brakes

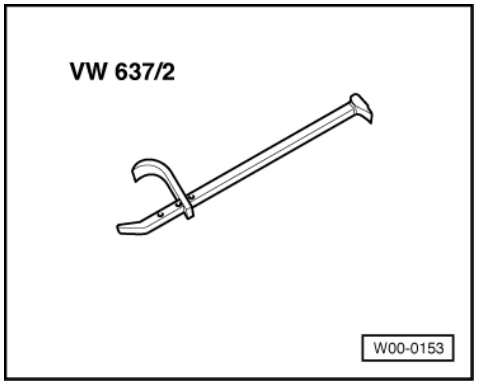

Special tools and workshop equipment required

- VW 637/2 Hub cap puller

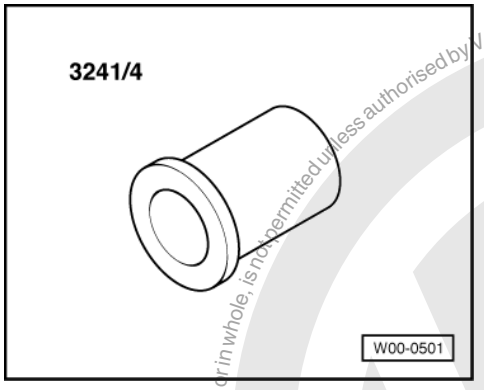

- 3241/4 Fitting sleeve

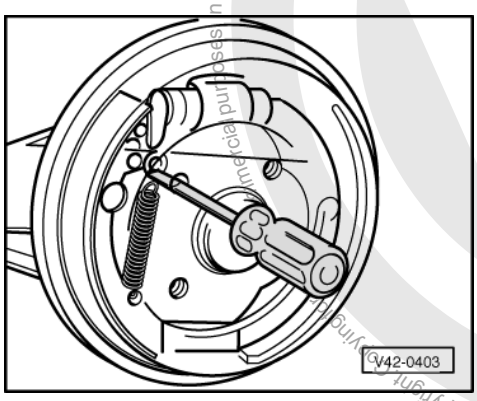

Protected by copyright. Copying for commercial purposes, in part or in whole, is not permitted unless authorised by Volkswagen AG. Volkswagen AG does not guarantee or accept any liability with respect to the correctness of information in this document. Copyright by Volkswagen AG.

satelettronica

Removing

-> Fig.1 Releasing brake adjustment

- Insert a screwdriver through a hole in the brake drum and push the wedge upwards.
- Remove cross-head screw for brake drum and take off brake drum.

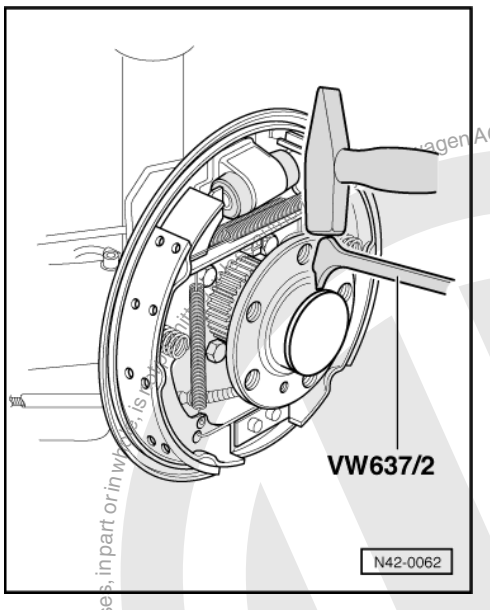

-> Fig.2 Pressing off dust cap

Loosen dust cap from seat by tapping lightly on the claw.

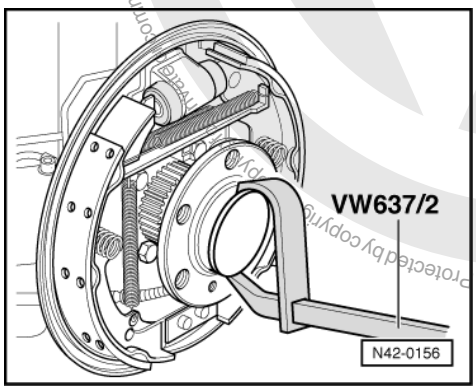

-> Fig.3 Pressing off dust cap

- Remove 12-point nut.
- Pull the hub/wheel bearing unit off the stub axle.

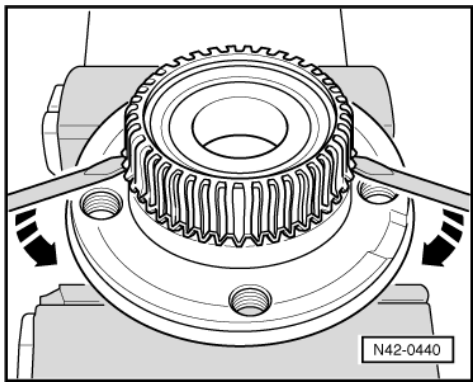

-> Fig.4 Pulling speed sensor rotor off wheel bearing/hub unit

- Lever rotor off wheel bearing/hub unit by prying alternately with two screwdrivers.

Volkswagen AG. Volkswagen AG does not guarantee or accept any liability with respect to the correctness of information in this document. Copyright by Volkswagen AG.
Protected by copyright. Commercial purposes, in part or in whole, is not permitted.
satelettronica

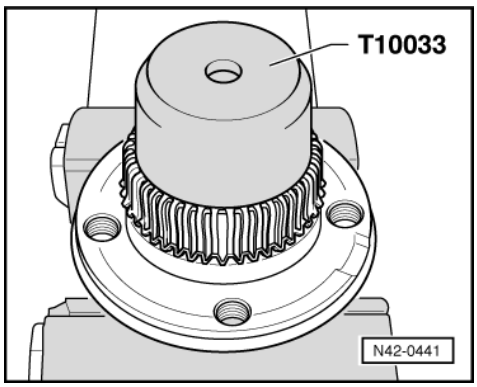

-> Fig.5 Driving speed sensor rotor onto wheel bearing/hub unit

- Drive speed sensor rotor onto stop using special tool T 10033.

Installing

- Push the hub/wheel bearing unit carefully onto the stub axle.

  Ensure that the hub/wheel bearing unit is not canted!

- Use a new 12-point nut and tighten to 175 Nm.

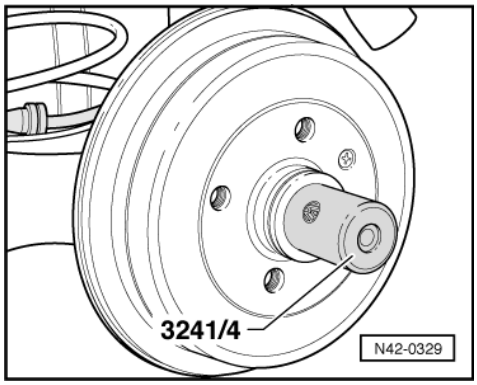

-> Fig.6 Driving in dust cap

Notes:

- Always renew grease caps.
- Damaged grease caps allow ingress of moisture, therefore always use the tool illustrated.

Further installation is performed in reverse order

6.4 - Removing and installing wheel bearing/hub unit on vehicles with disc brakes

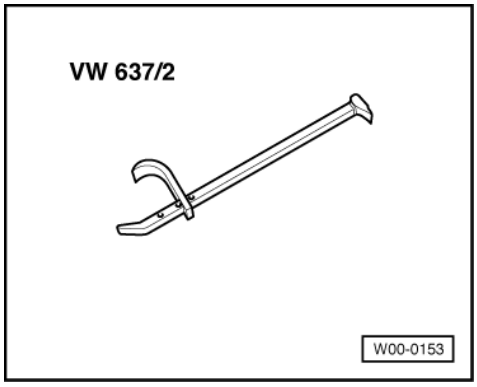

Protected by copyright. Copying for private or commercial purposes, in part or in whole, is not permitted unless authorised by Volkswagen AG. Volkswagen AG does not guarantee or accept any liability with respect to the correctness of information in this document. Copyright by Volkswagen AG.
satelettronica

Special tools and workshop equipment required

- VW 637/2 Hub cap puller

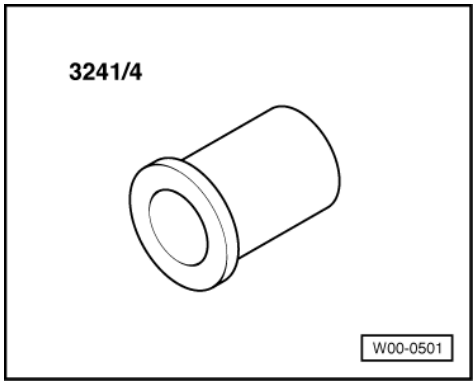

- 3241/4 Fitting sleeve

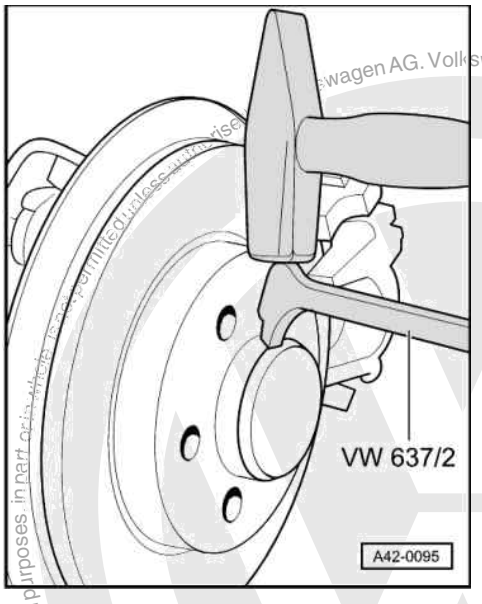

-> Fig.1 Pressing off dust cap

Loosen dust cap from seat by tapping lightly on the claw.

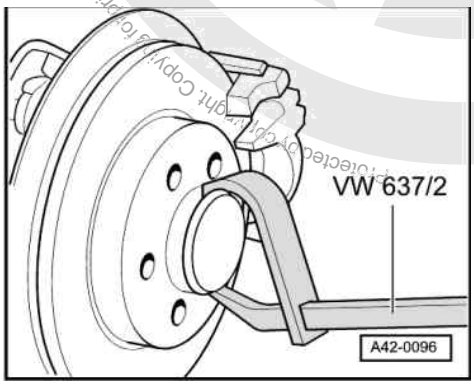

satelettronica

-> Fig.2 Pressing off dust cap

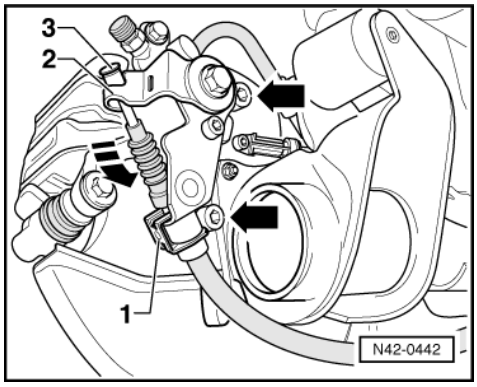

-> Fig.3 Removing brake caliper

- Remove clip -1-.
- Press brake lever -2- in direction of arrow and unhook brake cable -3-.
- Remove securing bolts -arrows- from brake caliper mounting.
- Remove brake caliper and hang up on body.
- Remove cross-head screw for brake disc and take off brake disc.
- Remove 12-point nut.
- Pull the hub/wheel bearing unit off the stub axle.

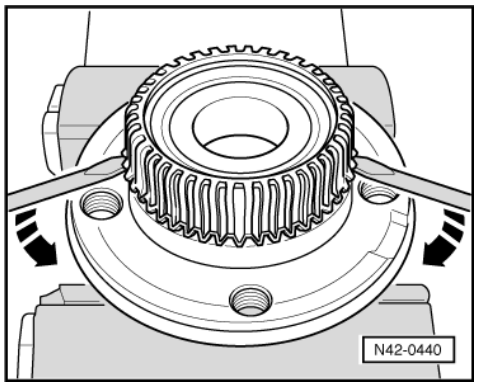

-> Fig.4 Pulling speed sensor rotor off wheel bearing/hub unit

- Lever rotor off wheel bearing/hub unit by prying alternately with two screwdrivers.

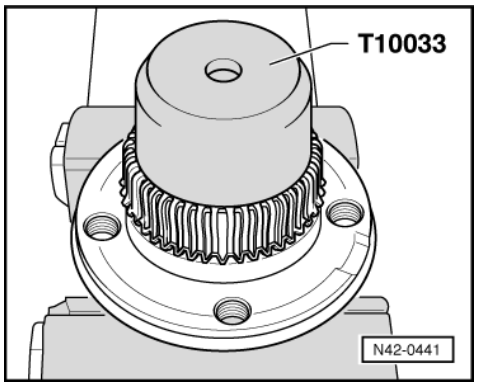

-> Fig.5 Driving speed sensor rotor onto wheel bearing/hub unit

- Drive speed sensor rotor onto stop using special tool T 10033.

Protected by copyright. Copying for private or commercial purposes, in part or in whole, is not permitted unless authorised by Volkswagen AG. Volkswagen AG does not guarantee or accept any liability with respect to the correctness of information in this document. Copyright by Volkswagen AG.
satelettronica

Installing

- Push the hub/wheel bearing unit carefully onto the stub axle.

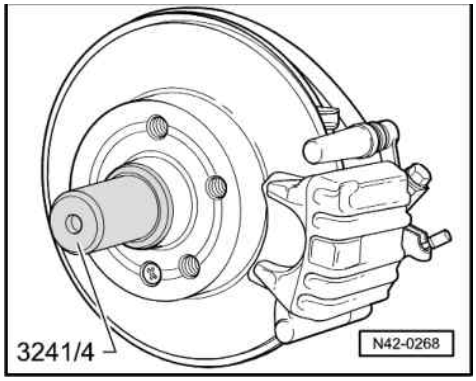

Ensure that the hub/wheel bearing unit is not canted!

- Use a new 12-point nut and tighten to 175 Nm.

-> Fig.6 Driving in dust cap

Notes:

- Always renew grease caps.
- Damaged grease caps allow ingress of moisture, therefore always use the tool illustrated.

Further installation is performed in reverse order

Protected by copyright. Copying for private or commercial purposes, in part or in whole, is not permitted unless authorised by Volkswagen AG. Volkswagen AG does not guarantee or accept any liability with respect to the correctness of information in this document. Copyright by Volkswagen AG.
satelettronica

44 - Wheels, Tyres, Wheel alignment

1 - Vehicle alignment

1.1 - Vehicle alignment

Protected by copyright. Copying for private or commercial purposes, in part or whole, is not permitted unless authorised by Volkswagen AG. Volkswagen AG does not guarantee or accept any liability with respect to the correctness of information in this document. Copyright by Volkswagen AG.

satelettronica

General

The vehicle alignment should be measured using VW/AUDI approved wheel alignment equipment!

We recommend that the front and rear axles are measured when performing alignment measurements.

Otherwise the proper running characteristics of the vehicle cannot be ensured!

Notes:

- Vehicle alignment should not be checked before the vehicle has completed 1000 to 2000 km (600 to 1200 miles) as then the coil springs have had time to settle.
- When making adjustments the relevant specifications are to be adhered to as close as possible.

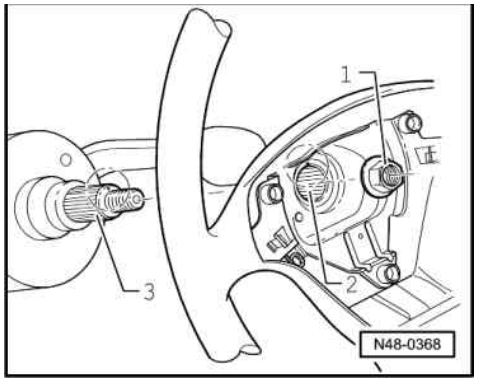

If the installation position of the rear axle and therefore the direction of travel of the vehicle is not taken into account an off-centre steering wheel may occur.

-> Steering wheel and steering column are marked.

These positions must not be changed!

A - Line on steering wheel
B - Punch mark on steering column

Only then the centre position on the rack can be guaranteed!

Steering columns supplied as a spare part do not have a centre punch mark.

After the vehicle alignment and the subsequent test drive these steering columns must be marked.

Tightening torque:

Hexagon nut; 50 Nm

Wheel alignment must be checked if:

Not running properly.
Involved in an accident and components have been changed.
Axle components have been removed.

Tyres wear on one side.

Front axle component renewed	Alignment required		Rear axle component renewed Caddy	Alignment required		Rear axle component renewed Polo Classic Polo Variant	Alignment required	
	Yes	No		Yes	No		Yes	No
Wishbone	X		Shock absorber		X	Suspension strut		X
Wheel bearing housing	X		Complete rigid rear axle	X		Complete torsion beam axle	X	
Track rod/track rod end	X		Leaf spring	X				
Steering box	X							
Subframe	X							
Shock absorber	X							

1.2 - Test prerequisites:

- Check suspension, wheel bearing, steering and steering linkage for excessive play and damage.
- Tread depth of tires on the same axle must not differ more than 2 mm.
- Tyres inflated to correct pressure
- Vehicle unladen

  Fuel tank must be full
  Spare wheel and vehicle tools are stowed at correct fitting locations
  The fluid reservoir for the windscreen/headlight washer system must be full.

- Ensure that the sliding plates and turn tables are not touching the end stop when checking the wheel alignment.

Please note!

- The test equipment must be properly adjusted and attached to the vehicle; observe device manufacturer's operating instructions.

  Apply to the manufacturer of your vehicle alignment equipment for training as and when required.
  Vehicle alignment platforms and vehicle alignment units/vehicle alignment computers can lose their calibration over a period of time.

  Vehicle alignment platforms and vehicle alignment units/vehicle alignment computers should be checked and if necessary adjusted within the framework of an inspection/maintenance at least once a year!
  - Treat these highly sensitive units carefully and conscientiously!

Protected by copyright. Copying for private or commercial purposes, in part or in whole, is not permitted unless authorised by Volkswagen AG. Volkswagen AG does not guarantee or accept any liability with respect to the correctness of information in this document. Copyright by Volkswagen AG.
satelettronica

1.3 - Preparations for measurements

Protected by copyright. Copyright by Volkswagen AG. Volkswagen AG does not guarantee or accept any liability with respect to the correctness of information in this document. Copyright by Volkswagen AG. Protected by copyright. Copy, distribution, modification, disclosure to third parties and other use of this document, or extracts thereof, is not permitted unless authorised by Volkswagen AG. Volkswagen AG does not guarantee or accept any liability with respect to the correctness of information in this document. Copyright by Volkswagen AG.

Special tools and workshop equipment required

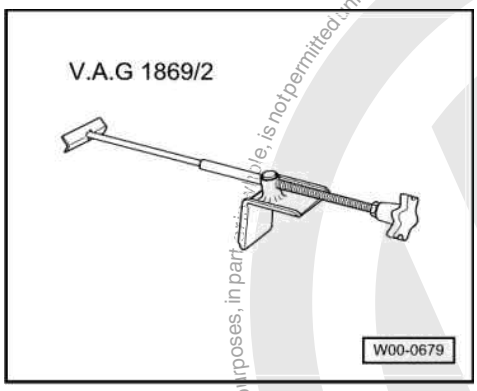

- V.A.G 1869/2 Brake pedal loading device

The lateral run-out of the wheel must be compensated for. Otherwise the result of the measurement will be incorrect.

If the lateral run-out compensation is not performed it is not possible to adjust the tracking correctly!

- Carry out wheel run-out compensation.

  When doing this observe the information from the manufacturer of the wheel alignment unit.

- Fit brake pedal loading device from V.A.G 1869/2.
- Depress brake pedal with brake pedal depressor.

Overview of work procedure for measuring vehicle

The following work sequence of steps must be adhered to!

- Check front axle camber and adjust if necessary => Page 164 .
  If the values are outside the tolerance the vehicle inclination to the side must be checked and if necessary compensated for before performing adjustments, =>Page 163 .
- Check rear axle camber.
  The camber is not adjustable.
  If the values are outside the tolerance the vehicle inclination to the side must be checked and if necessary compensated for =>Page 163 .
  If the values then still deviate from the specification it may be necessary to replace the rear axle.
- Check rear axle toe.
  The rear axle tracking is not adjustable.
  If the values are outside the tolerance the vehicle inclination to the side must be checked and if necessary compensated for before performing adjustments =>Page 163 .
  If the values then still deviate from the specification it may be necessary to replace the rear axle.
- Check front axle track and adjust if necessary.
  Adjusting track => Page 165 .

satelettronica

1.4 - Vehicle data sticker

Explanation of the PR. numbers on vehicle data sticker

Various running gears are installed depending on engine and equipment level. These are identified by the PR. numbers.

The running gear installed on the front axle in the vehicle is documented on the vehicle data sticker with the relevant PR. number.

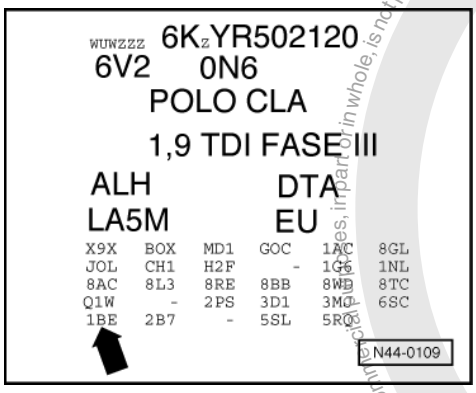

-> Example of a vehicle data sticker

In this example the vehicle is equipped with the sports running gear 1BE -arrow-.

The vehicle data plate is located in the spare wheel recess and in service booklet.

The PR. numbers are relevant for the vehicle specification alignment.

1.5 - Vehicle alignment specifications > 09.99

Front axle	Suspension strut axle			
Model	Caddy Van	Caddy Kombi	Polo Classic	Polo Estate
Total track (not depressed)	0° ± 10'			
Camber1) (in straight ahead position	-30' ± 20'			
Max. permissible difference between both sides	max. 30'			
Track difference angle when steering turned 20° to left and right	-1° 20' ± 30'			
Caster (cannot be adjusted) Max. permissible difference between both sides	+33' ± 30' max. 30'	+46' ± 30' max. 30'	+1° 26' ± 30' max. 30'	+1° 12' ± 30' max. 30'

1) Camber corrections can only be undertaken at the wheel bearing housing/suspension strut connection. Camber adjustment => Page 164 .

After adjusting steering geometry check wheel lock => Page 165

Rear axle	Torsion beam axle	Rigid axle
	Polo Classic, Polo Estate	Caddy Van/Kombi
Camber (cannot be adjusted)	-1° 30' ± 30'	-1° ± 30'
Max. permissible difference between both sides	max. 20'	
Total track (cannot be adjusted)	+ 20'± 10'	

Protected by copyright. Copyright privileges, in part or in whole, is not permitted unless authorised by Volkswagen AG. Volkswagen AG does not guarantee or accept any liability with respect to the correctness of information in this document. Copyright by Volkswagen AG.
satelettronica

Rear axle	Torsion beam axle	Rigid axle
Maximum difference from direction of running	max. 20'	

1.6 - Vehicle alignment specifications

Front axle	Suspension strut axle			
Model	Caddy Van		Caddy Kombi	
	Basic running gear	Heavy-duty running gear	Basic running gear	Heavy-duty running gear
Running gear	1BA	1BB	1BA	1BB
	You will find explanations of the PR. Nos. on page 161			
Total track (not depressed)	0° ± 10'			
Camber1) (in straight ahead position) Max. permissible difference between both sides	-25' ± 20' max. 30'			
Track difference angle when steering turned 20° to left and right	+1° 20' ± 30'			
Caster (cannot be adjusted) Max. permissible difference between both sides	+33' ± 30' max. 30'	+46' ± 30' max. 30'	+46' ± 30' max. 30'	+46' ± 30' max. 30'

1) Camber corrections can only be undertaken at the wheel bearing housing/suspension strut connection. Camber adjustment => Page 164 .

After adjusting steering geometry check wheel lock => Page 165

Rear axle	Rigid axle
	Caddy Van/Kombi
Camber (cannot be adjusted)	-1° ± 30'
Max. permissible difference between both sides	max. 20'
Total track (cannot be adjusted)	+ 25' ± 20'
Maximum permissible difference from direction of running	max. 40'

Front axle	Suspension strut axle		
Model	Polo Classic		
	Basic running gear	Heavy-duty running gear	Sports running gear
Suspension	1BA	1BB	1BE
	You will find explanations of the PR. Nos. on page 161		
Total track (no depressed)	0° ± 10'		
Camber1) (in straight ahead position) Max. permissible difference between sides	-30' ± 20' max. 30'	-20' ± 20'	-35' ± 20'
Track angle difference at 20° left and right lock	+1° 20' ± 30'		
Caster (not adjustable) Max. permissible difference between sides	+1° 21' ± 30' max. 30'	+1° 19' ± 30' max. 30'	+1° 13' ± 30' max. 30'

1) Camber corrections can only be undertaken at the wheel bearing housing/suspension strut connection. Camber adjustment => Page 164 .

After adjusting steering geometry check wheel lock => Page 165

Front axle	Suspension strut axle
Model	Polo Estate

satelettronica

Front axle	Suspension strut axle	
	Basic running gear	Heavy-duty running gear
Suspension	1BA	1BB
	You will find explanations of the PR. Nos. on page 161	
Total track (not depressed)	0° ± 10'	
Camber1) (in straight ahead position)	-30' ± 20'	-20' ± 20'
Max. permissible difference between sides	max. 30'	
Track angle difference at 20° left and right lock	+1° 20' ± 30'	
Caster (not adjustable) Max. permissible difference between sides	+1° 11' ± 30' max. 30'	+1° 19' ± 30' max. 30'

1) Camber corrections can only be undertaken at the wheel bearing housing/suspension strut connection. Camber adjustment => Page 164 .

After adjusting steering geometry check wheel lock => Page 165

Rear axle	Torsion beam axle
	Polo Classic, Polo Estate
Camber (not adjustable)	-1° 30' ± 30'
Max. permissible difference between sides	max. 20'
Total track (not adjustable)	+20' ± 10'
Maximum permissible difference from direction of running	max. 20'

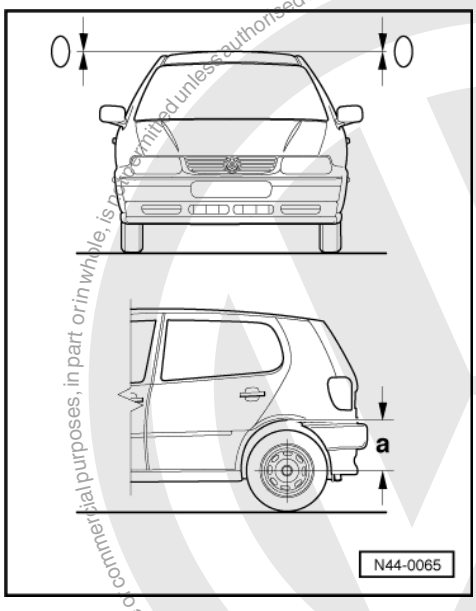

-> Vehicle transverse inclination "Zero position"

If the measured values are outside the permitted tolerances, the cause may be an incorrect vehicle attitude.

Right-hand drive vehicles or for example vehicles with an automatic gearbox can lean to one side slightly.

This is due to the installation position of the assemblies and their associated weight transfer and is normal.

- -> Then it is absolutely necessary to measure dimension "a" on left and right-hand sides.
- Correct differences if necessary.

On front axle, compensate by adding weights to top of relevant suspension turret.

Protected by copyright. Copyright by Volkswagen AG. Volkswagen AG does not guarantee or accept any liability with respect to the correctness of information in this document. Copying for private or commercial purposes, in part or in whole, is not permitted unless authorised by Volkswagen AG.
satelettronica

On rear axle, compensate by adding weights to relevant side of luggage compartment.

Sand filled sacks -weighting approx. 10 kg- are suitable for this.

1.7 - Adjusting front wheel camber

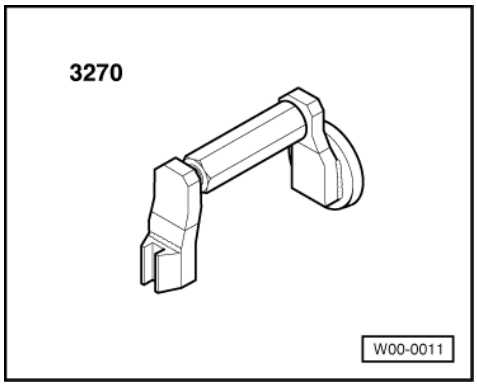

Special tools and workshop equipment required

- 3270 Tensioning appliance

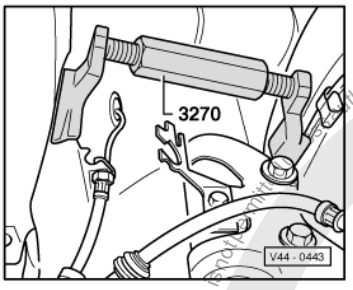

- -> Install special tool as shown in illustration and slightly pre-tension.
- Loosen suspension strut/wheel bearing housing connection.
- Adjust camber by turning the spindle to specified setting.
- Tighten suspension strut/wheel bearing housing connection (95 Nm).
- Check camber and if necessary, repeat adjustment.

- Slight cant of tool is permitted.
- Do not move steering with tool in place!

Protected by copyright. Copying for private or commercial purposes, in whole, or in part, is not authorised by Volkswagen AG. Volkswagen AG does not guarantee or accept any liability with respect to the correctness of information in this document. Copyright by Volkswagen AG.

satelettronica

Copyright by Volkswagen AG. Volkswagen AG does not guarantee or accept any liability with respect to the correctness of information in this document. Copying for private or commercial purposes, in part or in whole, is not permitted without the authorisation of Volkswagen AG.

1.8 - Adjusting front wheel toe

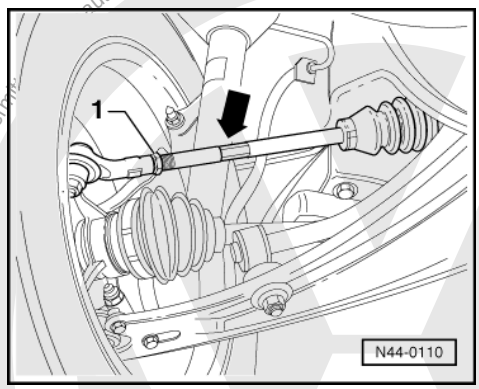

- -> Loosen lock nut -1-.
- Adjust track by turning the left and/or right track rod.

  To do this use an open jaw spanner on the hexagon -arrow- on the track rod.

After turning track rods, ensure that the bellows are not twisted.

  Twisted boots/bellows wear out quickly.

- Tighten lock nut -1- to 50 Nm and check tracking again.

After tightening lock nut -1- it is possible that the value will change slightly.

If the measured toe lies within the tolerances, the adjustment is correct.

1.9 - Checking left and right-hand wheel lock

This check is only necessary, if

- the left and right turning circles differ.
- the steering locks differ

- the tyre contacts the anti-roll bar on one side at full steering lock.

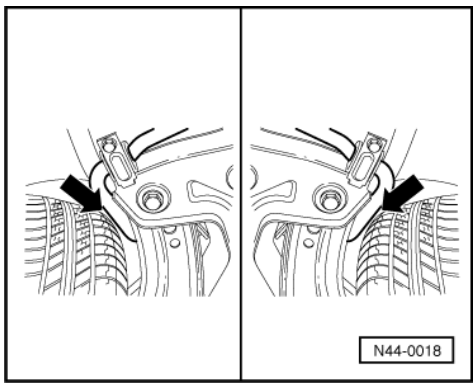

-> The distance between sub-frame and tyres (arrow) must be equal.

If the distances are unequal then this can be corrected by turning the left and right-hand track rods.

satelettronica

Example:

Left-hand wheel lock distance less than right-hand

- Loosen track rod lock nuts.
- Turn left-hand track rod anti-clockwise (out of track rod).
- To achieve equal dimensions turn right-hand track rod in opposite direction (screw into track rod).
- Check complete track, if necessary correct.
- Tighten lock nuts.

After turning track rods, ensure that the bellows are not twisted.

Twisted boots/bellows wear out quickly.

1.10 - Calculating the direction of travel:

- If both track figures have the same proceeding sign (+/+ or -/-), subtract the smaller figure from the larger figure and divide by 2.

Left rear wheel track	Right rear wheel track
+ 15'	+ 5'
15'- 5'= 10' 10' /2 = 5'	

Deviation from direction of travel = 5'

- Add figures with different prefix (+/-) and divide by 2.

Left rear wheel track	Right rear wheel track
+ 15'	- 5'
15' + 5'= 20' 20' / 2 = 10'	

Deviation from direction of travel = 10'

The individual result is the actual alignment deviation from the vehicle longitudinal axis.

Protected by copyright. Copying for private or commercial purposes, in part or in whole, is not permitted unless authorised by Volkswagen AG. Volkswagen AG does not guarantee or accept any liability with respect to the correctness of information in this document. Copyright by Volkswagen AG.
satelettronica

48 - Steering

1 - Steering column, column tube, steering wheel and airbag steering wheel> 09.99

1.1 - Steering column, column tube, steering wheel and airbag steering wheel> 09.99

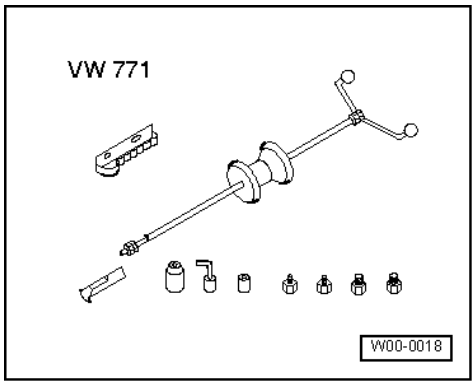

Special tools and workshop equipment required

- VW 771 Multi-purpose tool

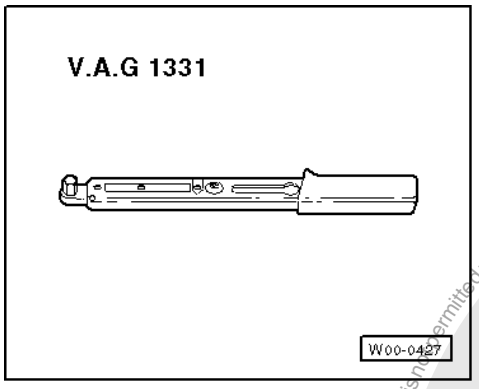

- V.A.G 1331 Torque wrench
- Puller with leg clamp (e.g. Kukko 204/2)

Additional information

- Workshop Manual Caddy 1996 ▸, Polo Classic 1996 ▸, Polo Estate 1998 ▸, General body repairs, Interior
- Workshop Manual Caddy 1996 ▸, Polo Classic 1996 ▸, Polo Estate 1998 ▸, General body repairs self-diagnosis

Airbag system functional check and interrogating fault memory

=> Body self-diagnosis; Repair group 01; Self-diagnosis of airbag systems; Function Self-diagnosis of airbag systems Function

Safety precautions when working on airbag

=> General body repairs, interior; Repair group 69; Airbag; Safety precautions when working on airbags Airbag Safety precautions when working on airbags

Protected by copyright. Copyright by Volkswagen AG. Volkswagen AG does not guarantee or accept any liability with respect to the correctness of information in this document. Copyright by Volkswagen AG. Reproduction, in whole or in part, is permitted unless authorised by Volkswagen AG. Volkswagen AG does not guarantee or accept any liability with respect to the correctness of information in this document. Copyright by Volkswagen AG.
satelettronica

Notes:

- All parts marked with a "1)" can be pre-assembled outside of the vehicle.
  => Page 172 pre-assembling steering column.
- Always renew self-locking nuts and bolts.
- Welding and straightening work on steering components is not permitted.

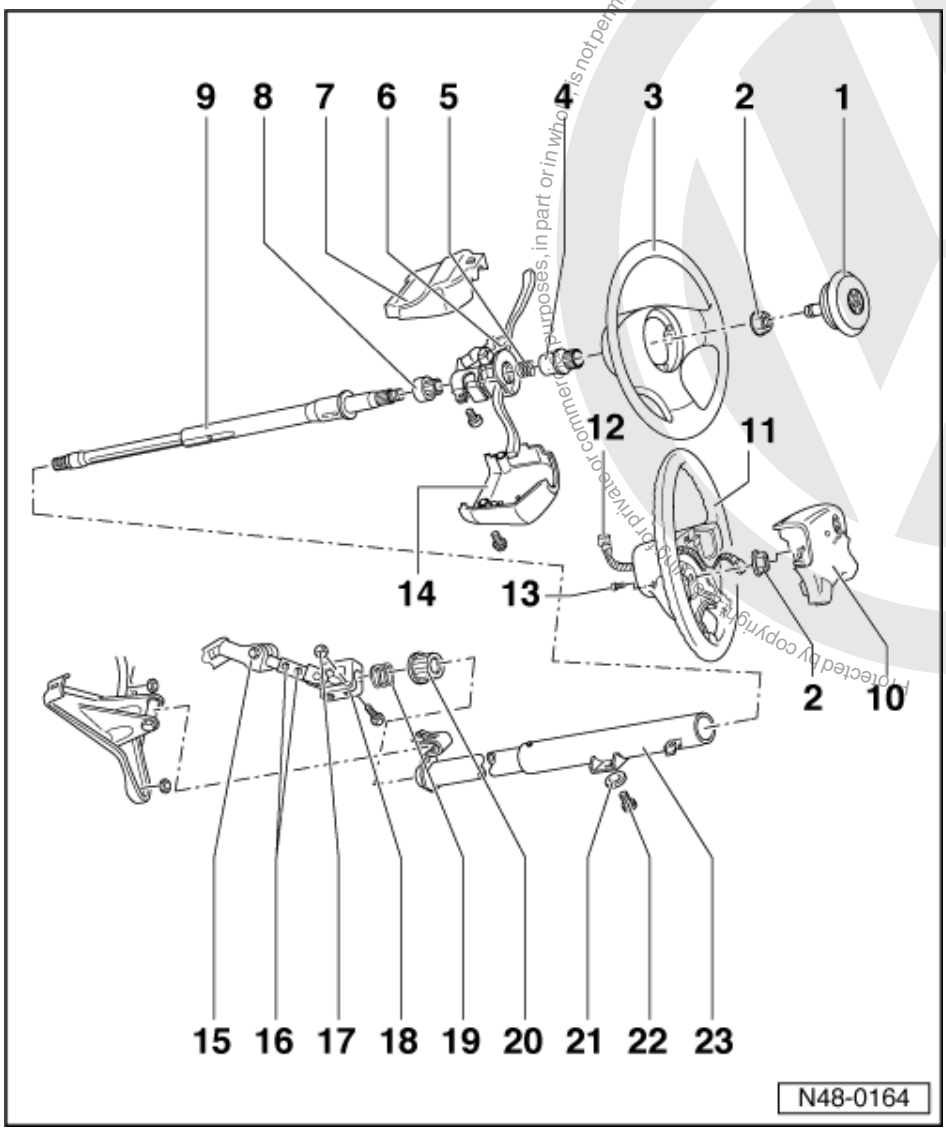

1 Cover plate
- With button for operating horn
- Removing => Fig. 5

2 Hexagon nut, 50 Nm

3 Steering wheel
- Install in central position

4 Splined adapter sleeve
- Pulling off => Page 171
- Installing => Page 171

5 Spring

6 Steering column switch/steering lock housing1)
- Distance between steering wheel/steering column switch is not adjustable
- Removing and installing lock cylinder

Protected by copyright. Copying for private or commercial purposes, in part or in whole, is not permitted unless authorised by Volkswagen AG. Volkswagen AG does not guarantee or accept any liability with respect to the correctness of information in this document. Copyright by Volkswagen AG.
satelettronica

=> Electrical system; Repair group 94; Steering column switch and ignition/starter switch; Removing and installing lock cylinder Steering column switch and ignition/starter switch Removing and installing lock cylinder

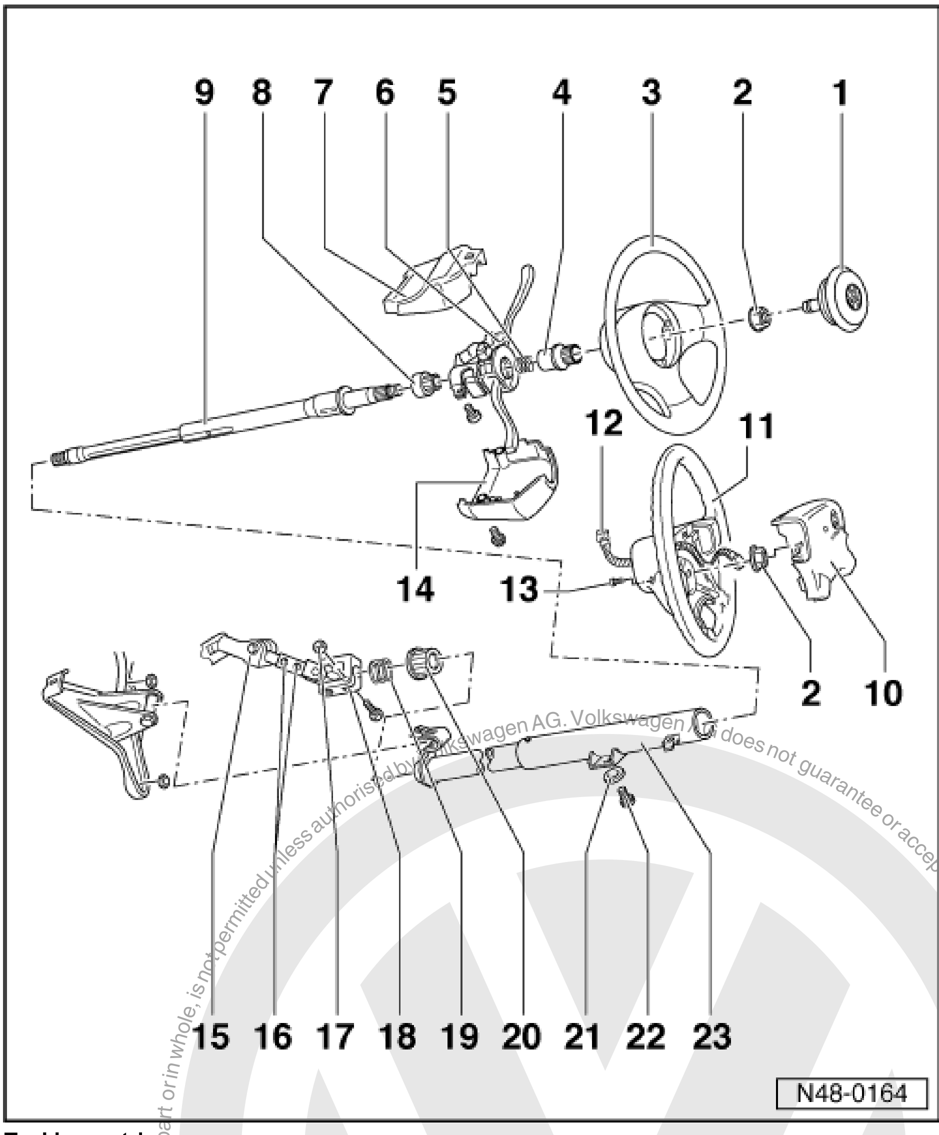

7 Upper trim

8 Support ring1)
- With washer

9 Steering column1)
- Remove by pulling upwards out of column tube
- Checking length =>Page 171

10 Airbag unit
- Removing and installing =>Page 174

11 Steering wheel for airbag
- Removing and installing =>Page 175
- Removing and installing coil connector =>Page 176

12 Connector

13 Hexagon socket head bolt, 9 Nm
- Renew

Protected by copyright. Copying for private or commercial purposes, in part or in whole, is not permitted unless authorised by Volkswagen AG. Volkswagen AG does not guarantee or accept any liability with respect to the correctness of information in this document. Copyright by Volkswagen AG.

sateletronica

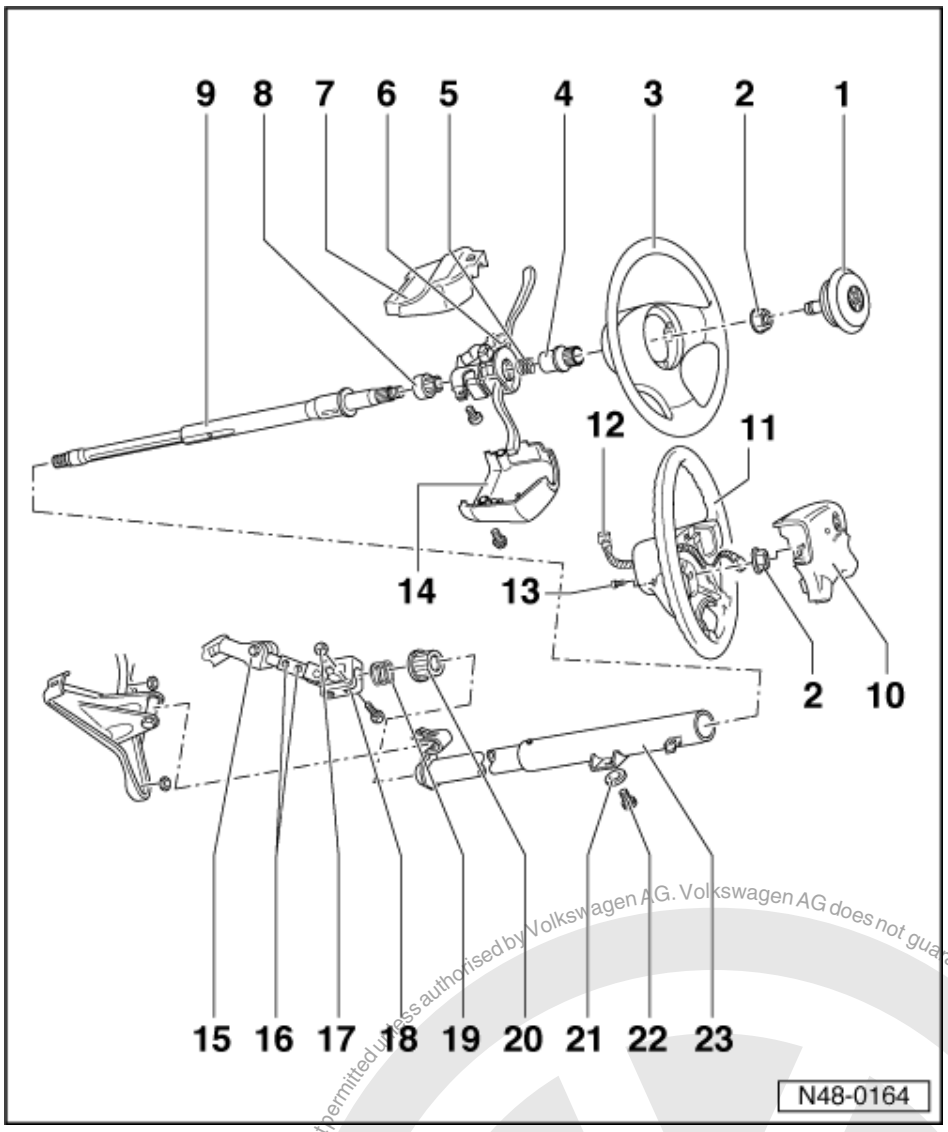

14 Lower trim
15 Hexagon bolt, 30 Nm
16 Hexagon nut, 25 Nm
17 Hexagon nut, 30 Nm
18 Steering column universal joint
19 Spring
20 Lower steering column bearing
- Pull in with VW 771 and large washer
- Drive out downwards with a tube

21 Washer
22 Shear bolt
- Tighten until head shears off
- Drill out to remove

23 Column tube

Protected by copyright. Copying for private or commercial purposes, in part or in whole, is not permitted unless authorised by Volkswagen AG. Volkswagen AG does not guarantee or accept any liability with respect to the correctness of information in this document. Copyright by Volkswagen AG.
satelettronica

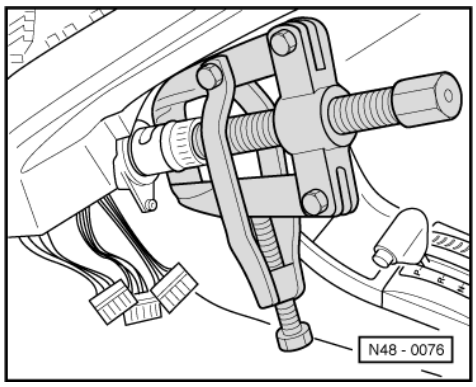

-> Fig.1 Pulling off splined adapter sleeve

Only use puller with leg clamp (e.g. Kukko 204/2 commercial type).

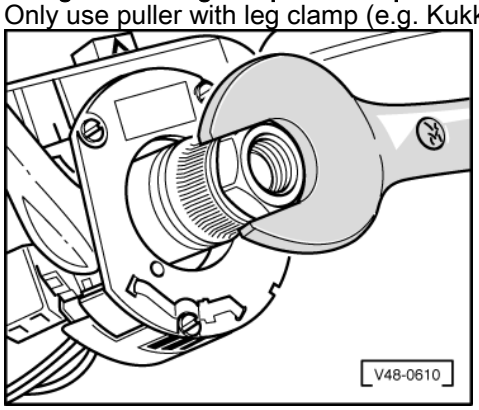

-> Fig.2 Installing splined adapter sleeve

- Place "sleeve" on steering column and press on with hexagon nut.
- Remove nut, place on washer and press sleeve fully on with nut until the "sleeve" is firmly on its seat.

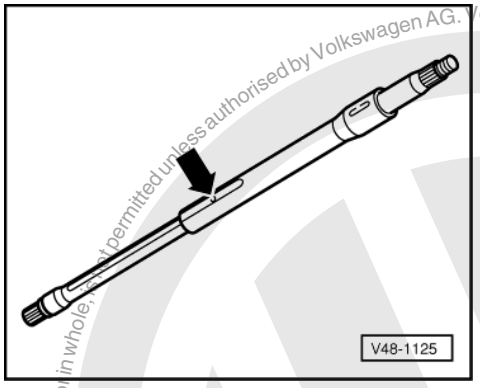

-> Fig.3 Checking length of steering column

The small metal lug on the lower section must be visible in the hole in the upper section (arrow). If necessary pull both sections firmly apart onto stop or press together.

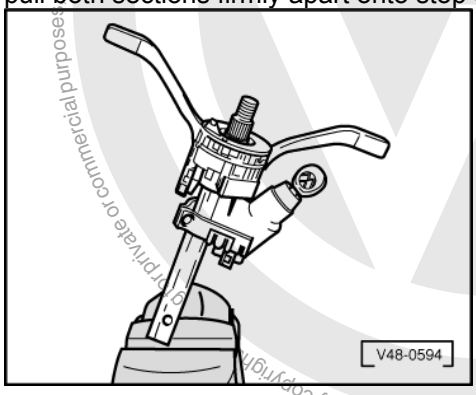

Protected by copyright. Copyright by Volkswagen AG.
Volkswagen AG does not guarantee or accept any liability with respect to the correctness of information in this document. Copyright by Volkswagen AG.
Copy for private or commercial purposes, in part or in whole, is not permitted unless authorised by Volkswagen AG.
satelettronica

-> Fig.4 Pre-assembling steering column

- Carefully clamp the lower section of the steering column in a vice so that the upper part is supported on the jaws.

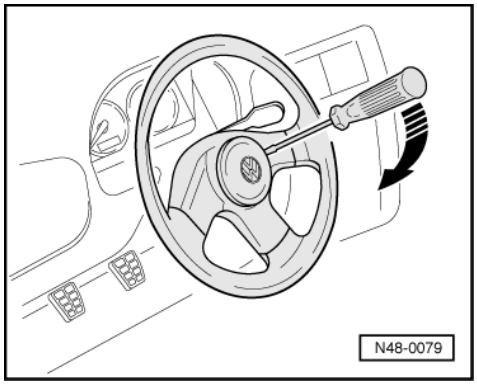

-> Fig.5 Removing cover plate

- Insert screwdriver between cover plate and steering wheel and lever cover plate off.

1.2 - Removing and installing column tube with steering column

Removing

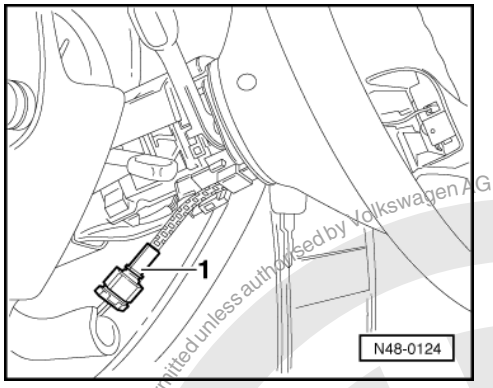

- Remove airbag unit (only vehicles with airbag =>Page 174).
- Remove steering wheel (steering wheel with airbag =>Page 175).
- Remove trim below steering column switch.
- -> Separate connector (arrow). (Pull foam rubber sleeve off connector, if fitted).

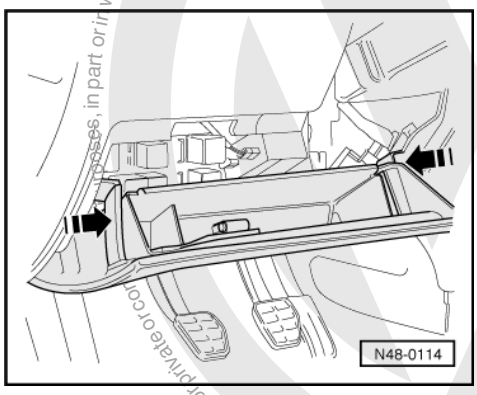

- -> Press stowage compartment clips together in direction of arrows.

Protected by copyright. Copyright by Volkswagen AG.
Copyright by Volkswagen AG. Volkswagen AG does not guarantee or accept any liability with respect to the correctness of information in this document.
Copyright by Volkswagen AG. Volkswagen AG does not guarantee or accept any liability with respect to the correctness of information in this document.
satelettronica

- Fold stowage compartment down and pull out towards rear.

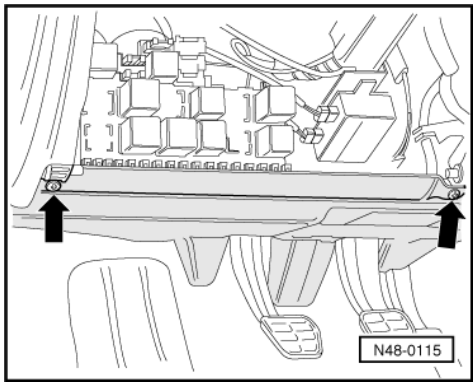

- -> Removing footwell cover.

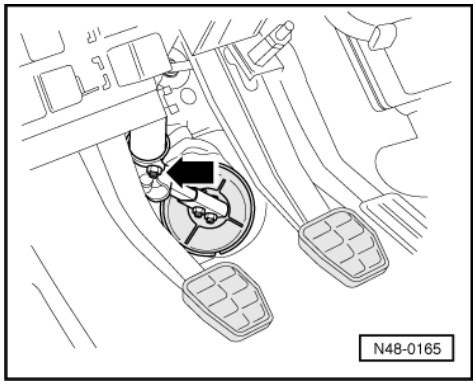

- -> Remove joint bolt.
- Separate cable connector on steering column switch.

Warning!
Wear protective goggles.

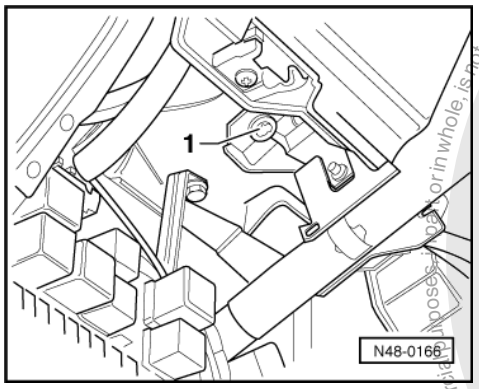

- -> Drill out shear bolts -1-.
- Remove drilled out bolts out of support (for ease of illustration 2nd bolt is not shown).
- Release steering column at the retainer in the joint shaft and remove by pulling out upwards.

Installing

Install in reverse order.

- Tighten shear head bolts until head shears off.

Protected by copyright. Copying for private or commercial purposes, in part or in whole, is not permitted unless authorised by Volkswagen AG. Volkswagen AG does not guarantee or accept any liability with respect to the correctness of information in this document. Copyright by Volkswagen AG.
satelettronica

1.3 - Removing and installing airbag unit

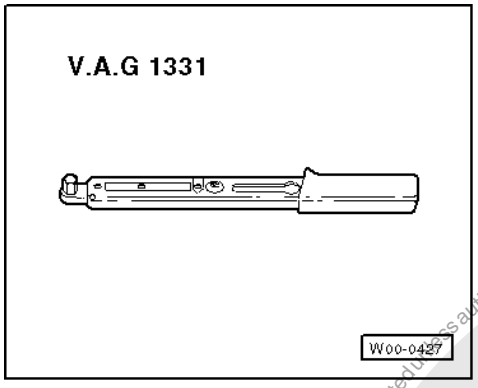

Special tools and workshop equipment required

- V.A.G 1331 Torque wrench

Removing

- Disconnect battery earth strap.
- Centralize steering wheel (wheels straight-ahead).

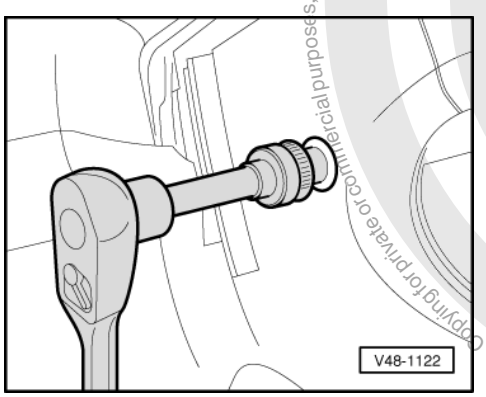

- -> Remove both socket head bolts from airbag unit.
- Remove airbag unit from steering wheel and pull connector off airbag unit.

Installing

Install in reverse order

Note:

Only use new hexagon socket head bolts for airbag unit. Tightening torque: 7 Nm.

- After installing the airbag unit first switch on ignition, then connect battery earth strap.

Warning! Ensure that no one is in the vehicle when connecting the battery earth strap.

Photocopy copyright. Copying for private or commercial purposes, in part or in whole is not permitted unless authorised by Volkswagen AG. Volkswagen AG does not guarantee or accept any liability with respect to the correctness of information in this document. Copyright by Volkswagen AG.
satelettronica

1.4 - Removing and installing airbag steering wheel

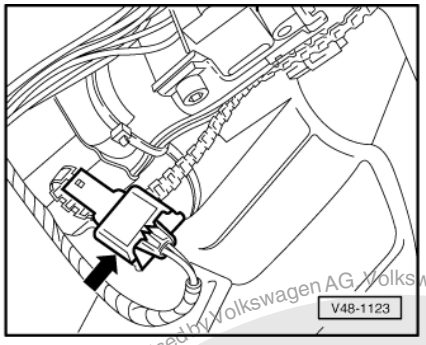

Removing

- Removing airbag unit. =>Page 174
- Remove trim below steering column switch.
- -> Separate connector (arrow). (Pull foam rubber sleeve off connector, if fitted).
  Remove hexagon nut and pull steering wheel off steering column.

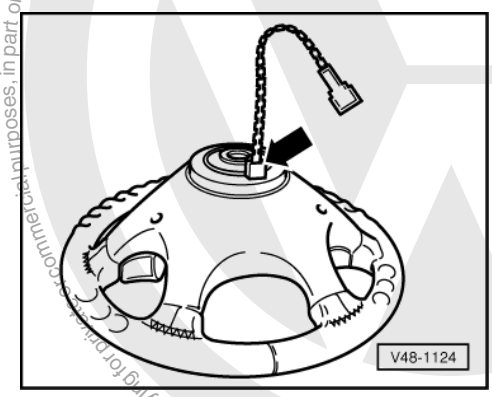

-> After pulling steering wheel off, turn centring ring slightly so that the wire (arrow) faces downwards. (Hold steering wheel in installation position). The centring ring then locates and is prevented from turning.

If this step is not performed or if the centring ring is turned in an uncontrolled manner, it can lead to the coil connector in the centring ring being over-stressed at full lock, causing irreparable damage.

Installing steering wheel

- Fit steering wheel, screw on nut and tighten. Tightening torque: 50 Nm.
- Connect airbag unit connector below steering wheel.
- Install trim panel below steering column. Ensure that the centring ring cable connection is located in the recess in the trim panel.
- Connect connector in steering wheel to airbag unit connector.
- Install airbag unit =>Page 174

Note:

Use new hexagon socket head bolts for airbag unit.

- After installing the airbag steering wheel first switch on ignition, then connect battery earth strap.

Copyright by Volkswagen AG. Volkswagen AG does not guarantee or accept any liability with respect to the correctness of information in this document. Copyright by Volkswagen AG. Protected by copyright. Copying for private or commercial purposes, in part or in whole, is not permitted unless authorised by Volkswagen AG.
satelettronica

Warning!
Ensure that no one is in the vehicle when connecting the battery earth strap.

1.5 - Removing and installing centring ring with slip ring

Remove airbag unit =>Page 174

Remove steering wheel =>Page 175

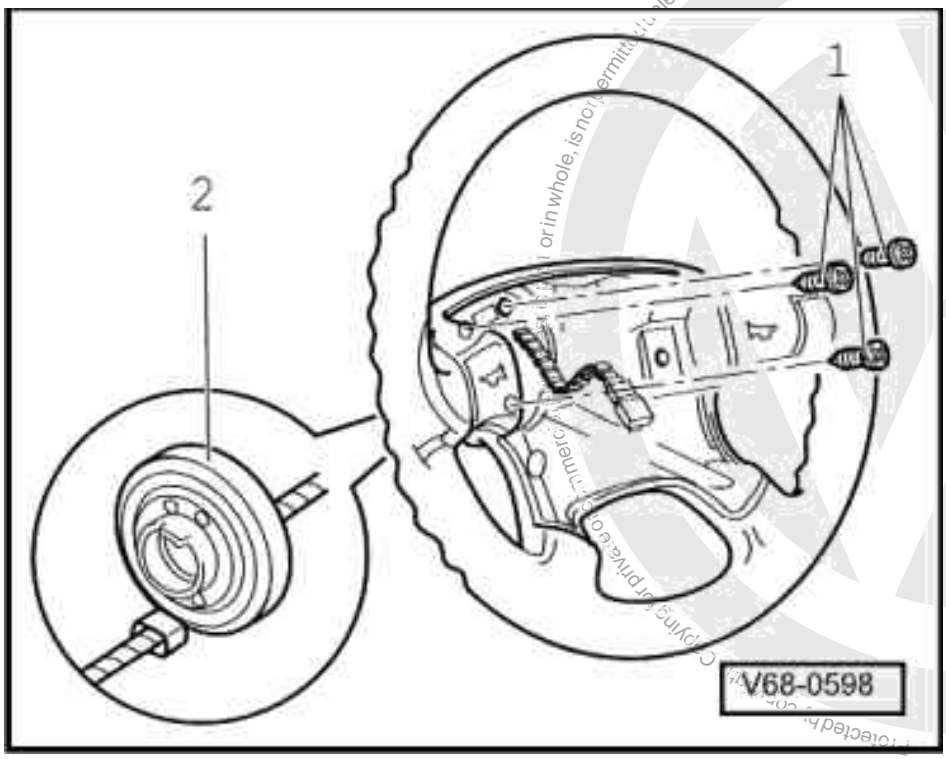

- Separate single connector for horn.
- -> Remove cross head screws -1- and pull centring ring with slip ring -2- off steering wheel.

Install steering wheel =>Page 175

Install airbag unit =>Page 174

Notes:

- When removing and installing the coil connector with slip ring, ensure that the coil connector is in the centre position.
- As a new part the coil connector with slip ring is secured in the centre position by a cable tie.

Copyright by Volkswagen AG. Volkswagen AG does not guarantee or accept any liability with respect to the correctness of information in this document. Copying or in whole, is not permitted unless authorised by Volkswagen AG.
satelettronica

1.6 - Removing and installing column tube for height adjustable steering wheel

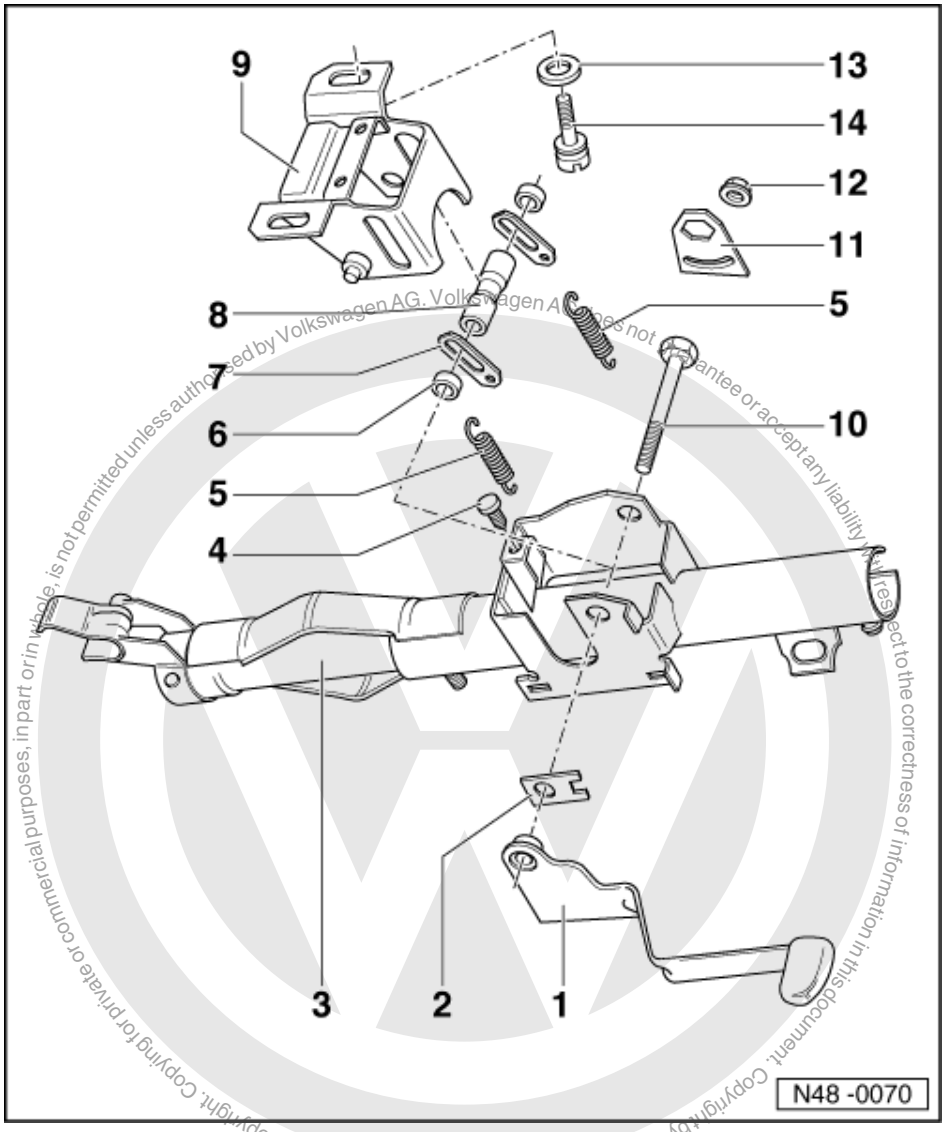

The column tube can be adjusted in height by approx. 50 mm

1 Operating lever
2 Packing plate
3 Column tube
- Square housing fits over mounting bracket

4 Rubber stop
5 Return spring
- Hooked into mounting bracket and column tube

6 Thrust washer
7 Packing plate

satelettronica

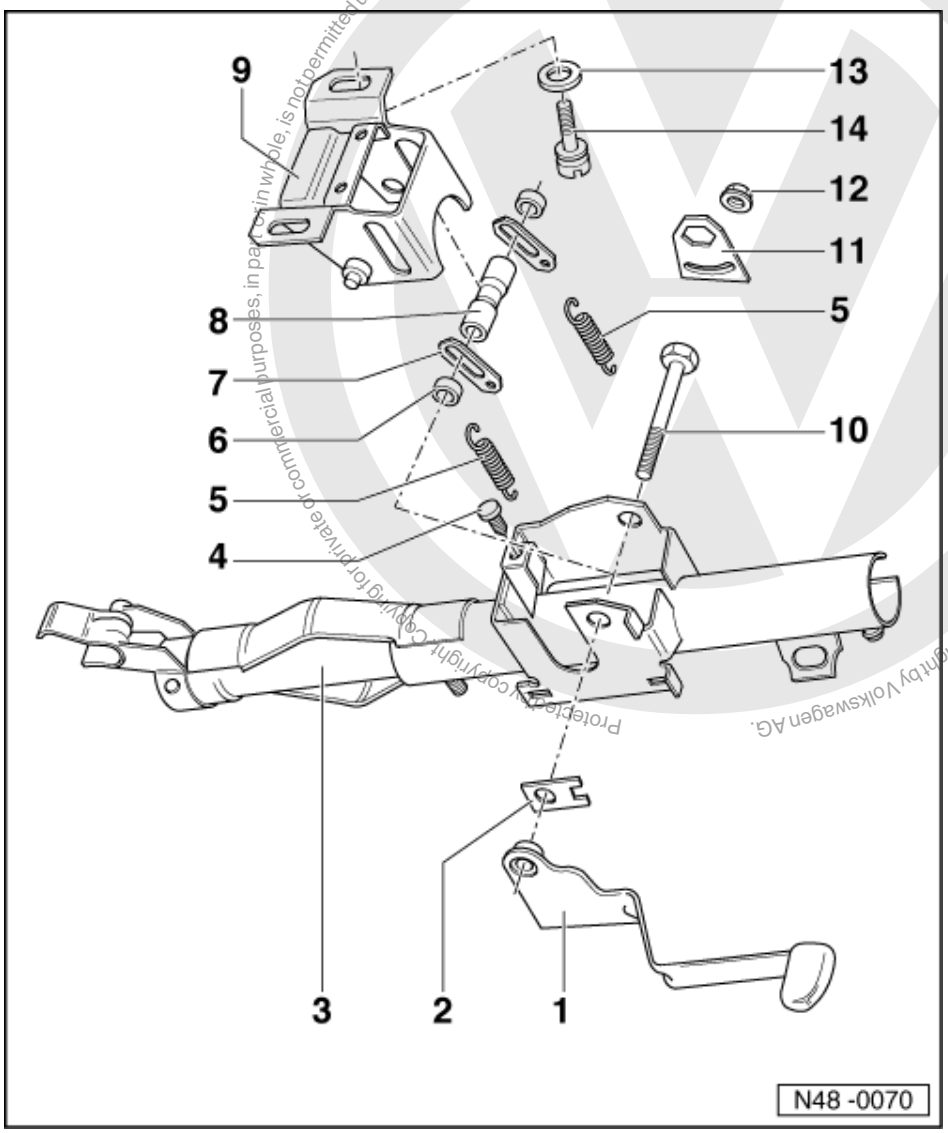

8 Clamping sleeve
9 Mounting bracket
- Before assembling, coat side sliding surfaces with MoS2 paste

10 Bolt with left-hand trapezoidal thread
- Tighten to 22 Nm, lever on upper stop
- After tightening fit locking plate

11 Locking plate
12 Locking plate nut, 8 Nm
- Self-locking
- Renew

13 Washer
14 Shear bolt
- Tighten until head shears off

Protected by copyright. Copying for private or commercial purposes, in part or in whole, is not permitted unless authorised by Volkswagen AG. Volkswagen AG does not guarantee or accept any liability with respect to the correctness of information in this document. Copyright by Volkswagen AG.
satelettronica

2 - Airbag, steering wheel, steering column

2.1 - Airbag, steering wheel, steering column

Steering column assembling instructions =>Assembly overview steering column, column tube Page 189

Airbag system functional check and interrogating fault memory

=> Body self-diagnosis; Repair group 01; Self-diagnosis of airbag systems; Function Self-diagnosis of airbag systems Function

Safety precautions when working on airbag

=> General body repairs, interior; Repair group 69; Airbag; Safety precautions when working on airbags Airbag Safety precautions when working on airbags

2.2 - Removing and installing driver's airbag unit

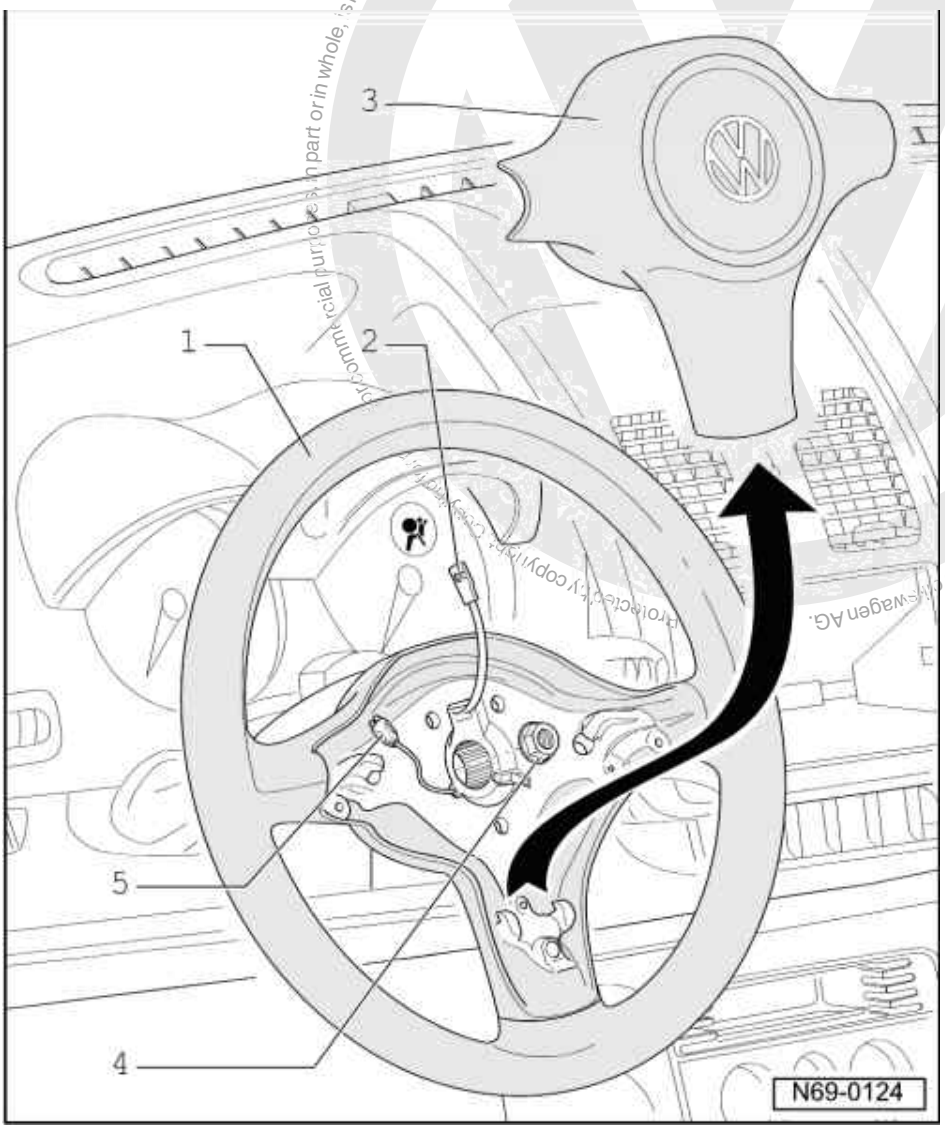

1 **Steering wheel**
- Removing => Page 182

2 **Connector**

satelettronica

- For airbag unit

3 Airbag unit
- Removing => Page 180

4 Hexagon combi-nut
- 50 Nm

5 Connector
- For horn

Removing

- Disconnect battery earth strap.
- Release steering column adjustment.
- Turn steering wheel - 1 - until horizontal steering wheel spokes are vertical. Pull out steering column completely and press down to lowest position.
- Insert a screwdriver with approx. 5 mm wide blade and angled to give a length of 55 mm, from the back side into hole in steering wheel hub.
- Turn screwdriver through 90°, thereby pushing securing ring -2- off locking lugs in steering wheel hub and thereby releasing airbag unit on this side.
- Turn steering wheel back 180° and release second locking lug on opposite side.

satelettronica

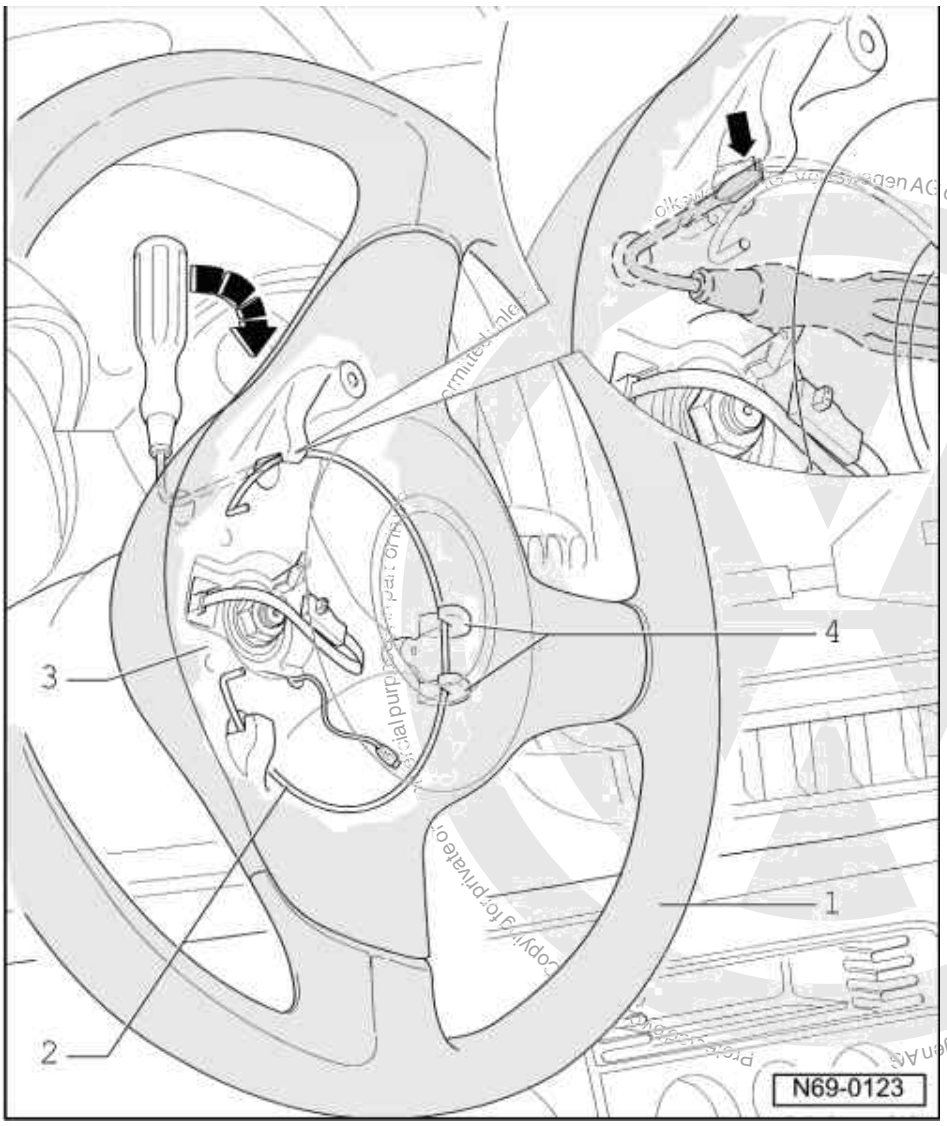

- Grasp airbag unit on horizontal spokes and push out of vertical anchorage.
- Pull connector off airbag unit.

Installing

- Fit connector onto airbag unit.
- Position airbag in installation position. Lock airbag unit by pressing on horizontal spoke section first and then on vertical section.
- Secure steering column adjustment.
- Switch on ignition.

Warning!
When connecting the battery earth strap ensure no person is in the vehicle.

- Connect battery earth strap.

satelettronica

2.3 - Removing and installing steering wheel

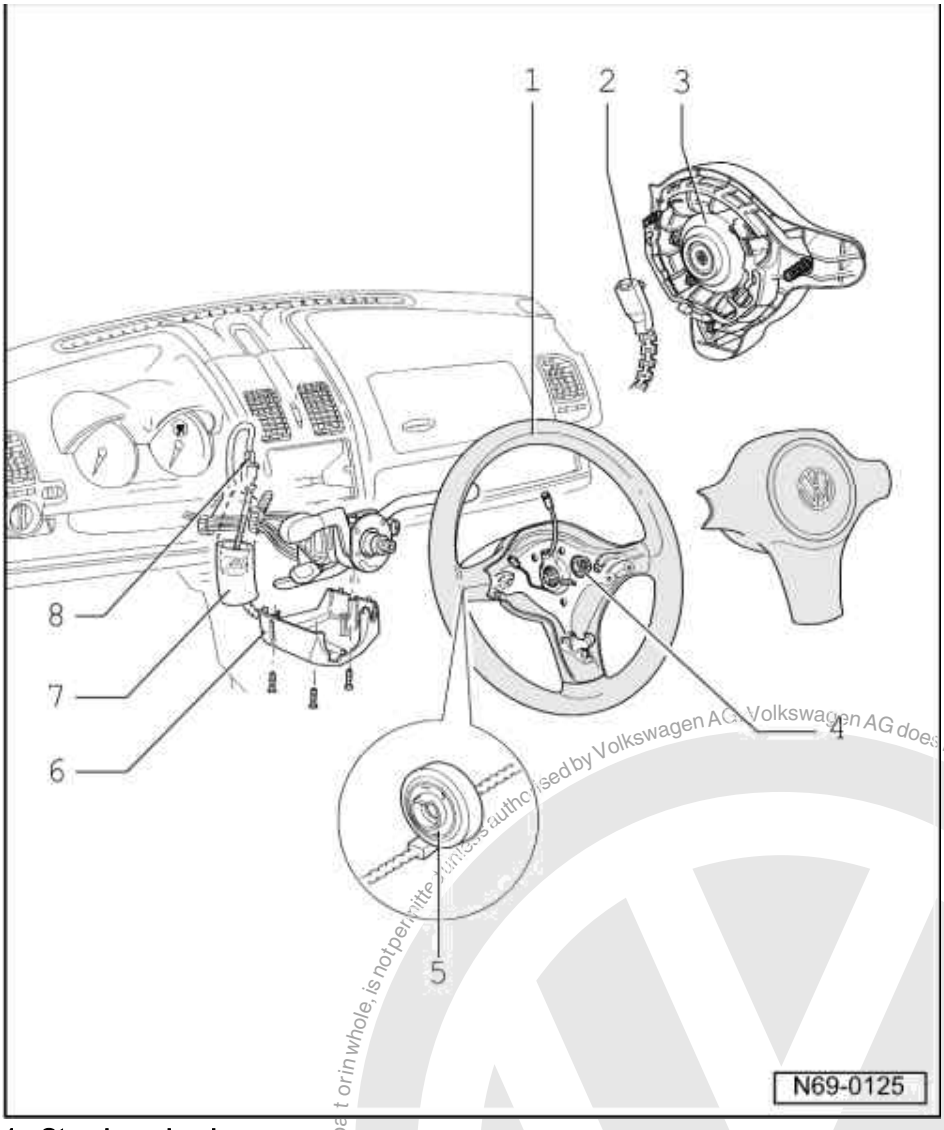

1 Steering wheel
- Removing => Page 183
- Installing => Page 184

2 Connector
- For airbag unit

3 Airbag unit

4 Hexagon combi-nut
- 50 Nm

5 Coil connector with slip ring
- Removing => Page 184

6 Trim lower section

7 Foam tube

8 Connector

Protected by copyright. Copying for private or commercial purposes, in part or in whole, is not permitted unless authorised by Volkswagen AG. Volkswagen AG does not guarantee or accept any liability with respect to the correctness of information in this document. Copyright by Volkswagen AG.
satelettronica

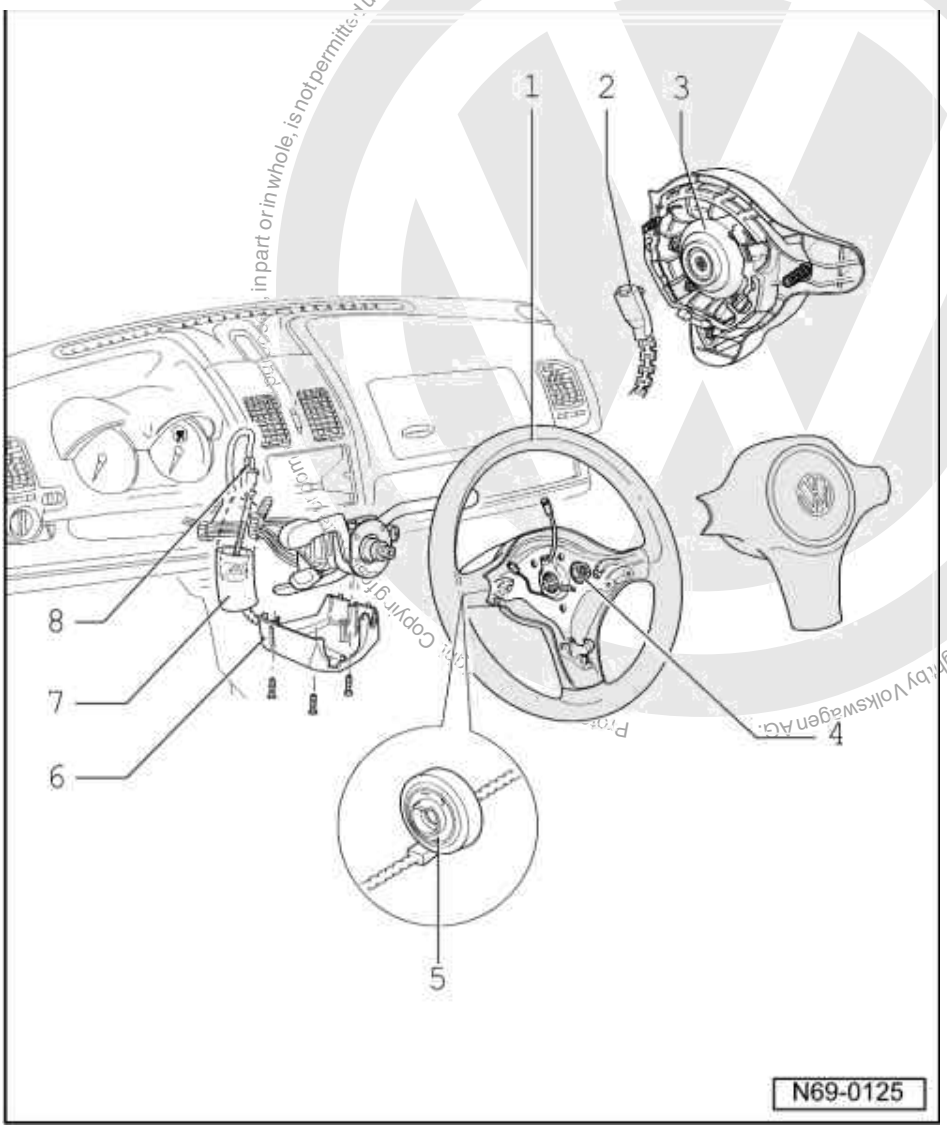

Removing

- Removing driver's airbag unit => Page 180 .
- Remove steering column switch lower trim section - 6 -.
- Pull foam tube - 7 - off the connector - 8 - and separate connector.
- Turn wheels to straight-ahead position.
- Remove hexagon nut - 4 - and pull steering wheel off steering column (hexagon nut 50 Nm).

Coil connector with slip ring - 5 - remains on the steering wheel.

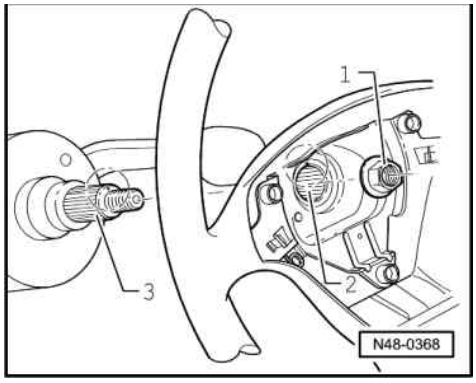

satelettronica

Installing steering wheel

- -> Fit steering wheel so that the line marked on the steering wheel hub -2- and the centre punch mark on the steering column -3- -arrow B- align.

Steering columns supplied as a spare part do not have a centre punch mark.

They must be marked after performing alignment tests or a test drive.

2.4 - Removing and installing coil connector with slip ring

Remove airbag unit =>Page 180

Remove steering wheel =>Page 183

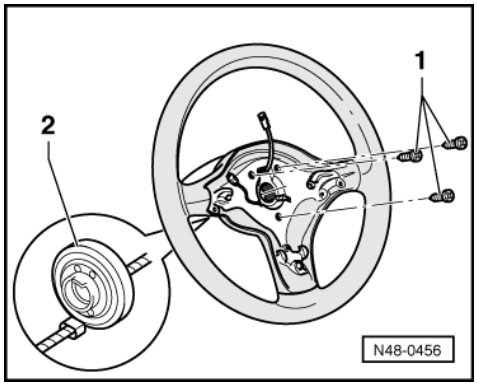

- Separate single connector for horn.
- -> Remove Torx screws -1- and pull coil connector with slip ring -2- off steering wheel.

Installing steering wheel =>Page 184

Installing airbag unit =>Page 181

Notes:

- When removing and installing the coil connector with slip ring, ensure that the coil connector is in the centre position.
- As a new part the coil connector with slip ring is secured in the centre position by a cable tie.

2.5 - Removing and installing column tube with steering column

Removing

Warning!
Before removing the steering wheel the following conditions must be met:
- **rEarth strap disconnected from battery.**
- **rWheels must be in straight ahead position.**

If these instructions are not followed, it is possible that the airbag system may fail later!

Remove airbag unit =>Page 180

Remove steering wheel =>Page 183

satelettronica

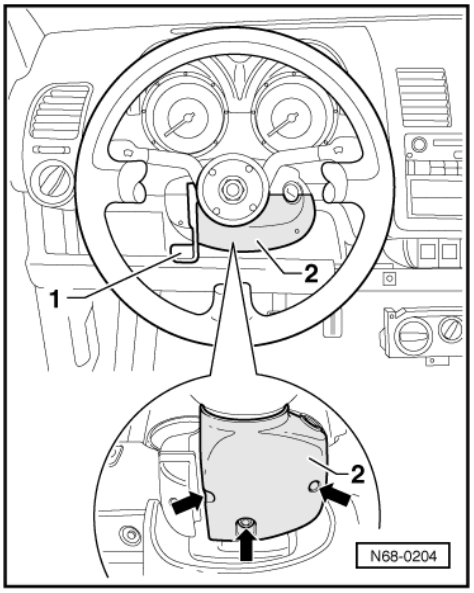

- -> Release steering wheel height adjustment -1- and put steering wheel in highest position.
- Remove bolts -1-.
- Take off lower steering column switch trim -2-.

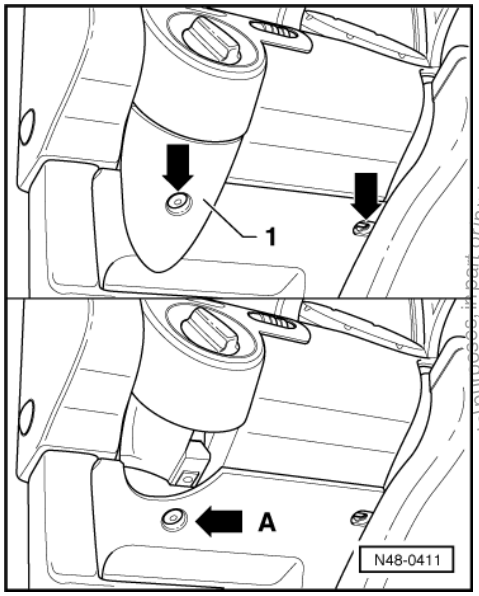

- -> Remove securing screws -arrows-.
- Take off cover -1-.
- Remove securing screw right of steering column.
- Remove screw -arrow A-.

Protected by copyright. Copying for private or commercial purposes, in part or in whole, is not permitted unless authorised by Volkswagen AG. Volkswagen AG does not guarantee or accept any liability with respect to the correctness of information in this document. Copyright by Volkswagen AG.
satelettronica

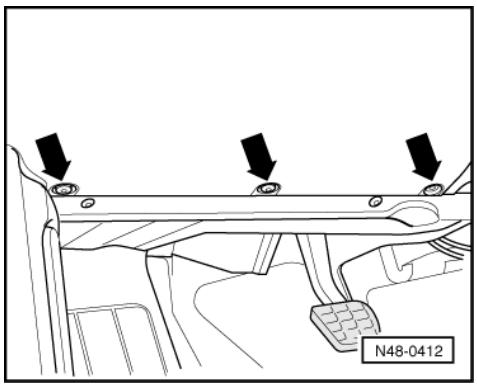

- -> Remove securing screws -arrows-.
- Remove stowage compartment.

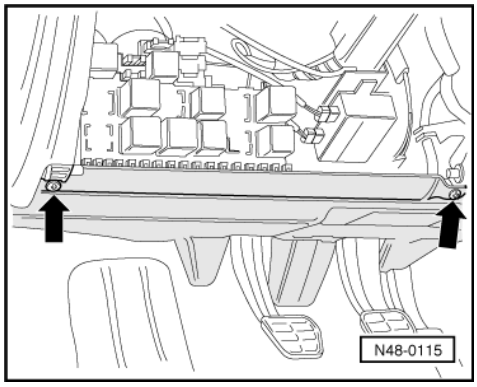

- -> Removing footwell cover.

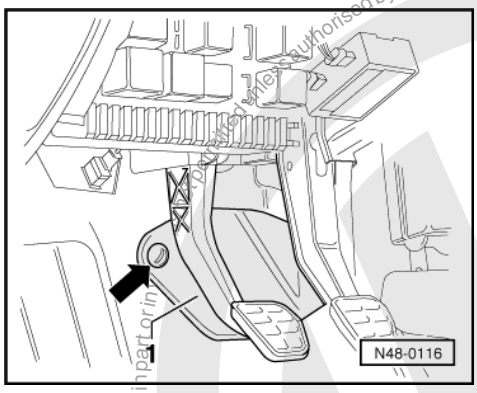

- -> Removing cover -1-.

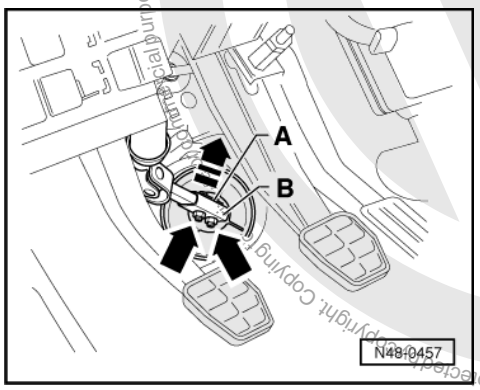

Protected by copyright. Copying for non-commercial purposes is authorised by Volkswagen AG. Volkswagen AG does not guarantee or accept any liability with respect to the correctness of information in this document. Copyright by Volkswagen AG.

satelettronica

- -> Unscrew nuts -arrows- and pull connecting piece -A- out of connecting sleeve -B- in direction of arrow.

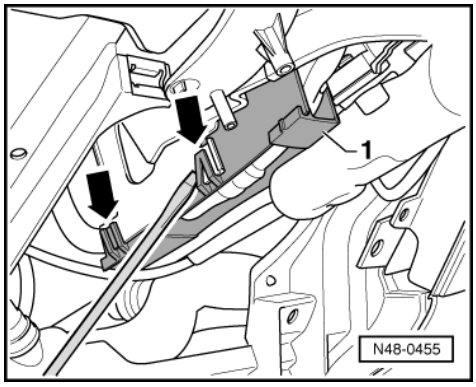

- -> Using screwdriver, unclip -arrows- cable channel -1- from column tube.

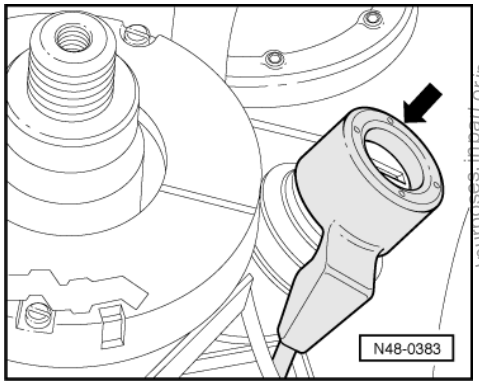

- -> Carefully pull the immobilizer reading coil -D2- -arrow- off steering lock housing.
- Pull wiring connectors off steering column switch.

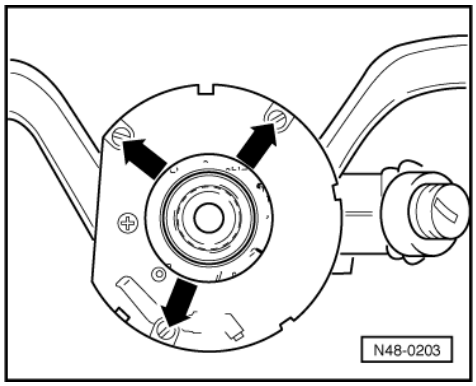

- -> Remove securing screws -arrows-.
- Pull turn signal and windscreen wiper switch off steering column.
- Pull connector off steering lock housing.

Protected by copyright. Copying for private or commercial purposes, in part or in whole, is not permitted unless authorised by Volkswagen AG. Volkswagen AG does not guarantee or accept any liability with respect to the correctness of information in this document. Copyright by Volkswagen AG.
satelettronica

Removing steering column shear bolts

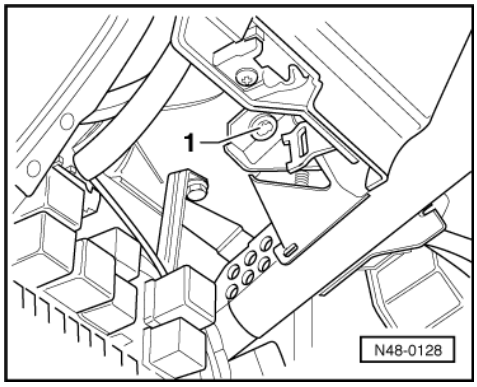

Warning!
Wear protective goggles.

- -> Drill out shear bolts -1- or chisel off with a suitable chisel.
- Remove drilled out bolts from support if necessary (for ease of illustration 2nd bolt is not shown).

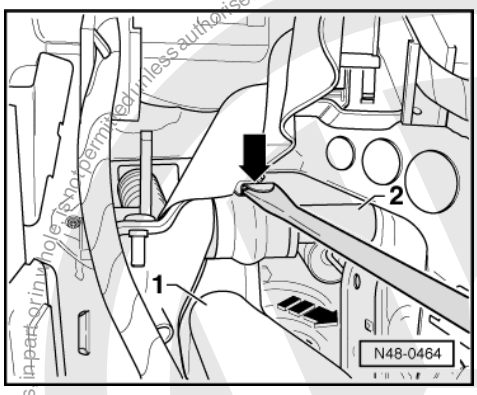

- -> Using screwdriver, press tab -arrow- upwards.
- At the same time, pull column tube -1- in direction of arrow out of mounting bush -2-.

Installing

Install in reverse order.

- Tighten shear head bolts until head shears off.

Protected by copyright. Copying for private or commercial purposes, in part or in whole, is not permitted unless authorised by Volkswagen AG. Volkswagen AG does not guarantee or accept any liability with respect to the correctness of information in this document. Copyright by Volkswagen AG.
satelettronica

2.6 - Assembly overview, steering column, column tube

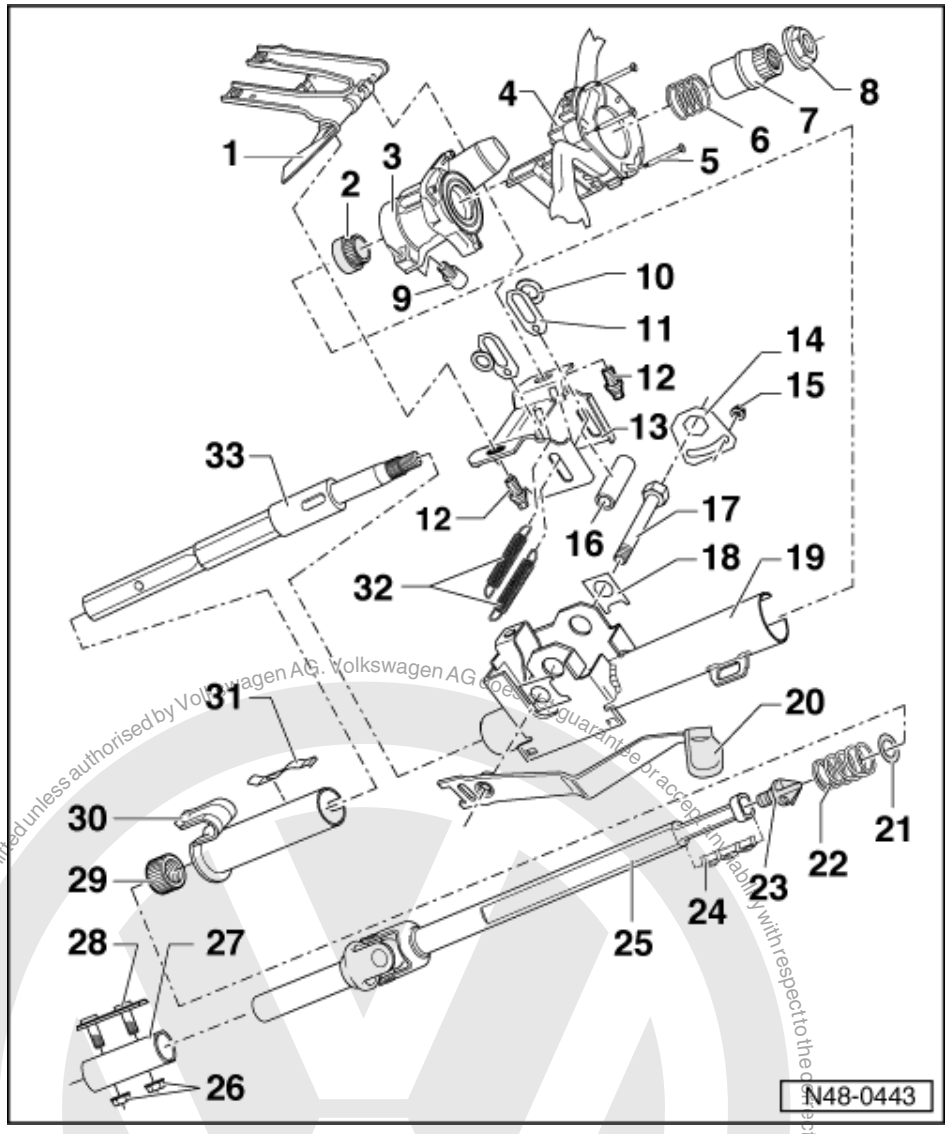

Notes:

- Always renew self-locking nuts and bolts.
- Welding and straightening work on steering components is not permitted.

1 Support
2 Support ring
- With washer

3 Steering lock housing
- Removing and installing lock cylinder

=> Electrical system; Repair group 94; Steering column switch and ignition/starter switch; Removing and installing lock cylinder Steering column switch and ignition/starter switch Removing and installing lock cylinder

4 Steering column switch

Copyright by Volkswagen AG. Volkswagen AG does not guarantee or accept any liability with respect to the correctness of information in this document. Copyright by Volkswagen AG. Reproduction for private or commercial purposes, in part or in whole, is not permitted unless authorised by Volkswagen AG.
satelettronica

Copyright by Volkswagen AG. Volkswagen AG does not guarantee or accept any liability with respect to the correctness of information in this document. Copying for private or commercial purposes, in part or in whole, is not permitted unless authorised by Volkswagen AG.

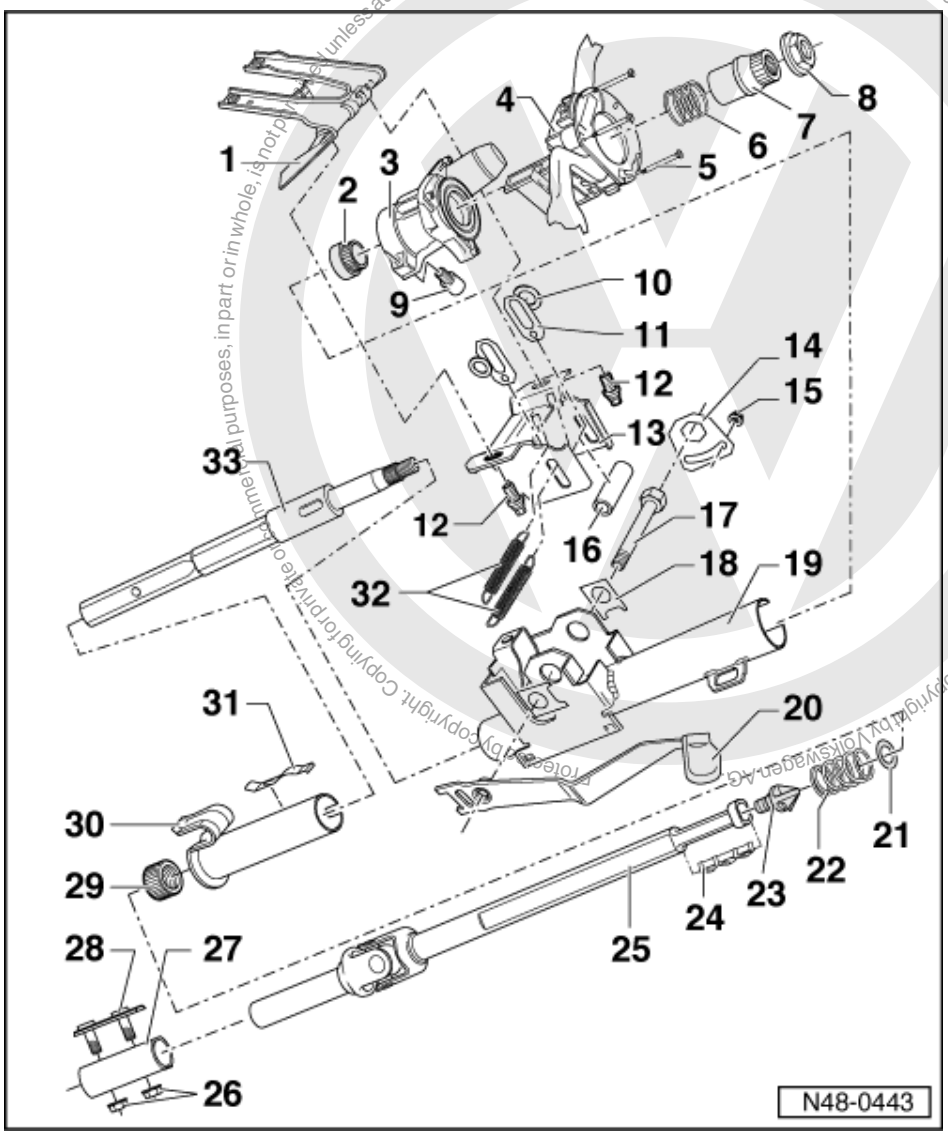

5 Bolt
- Qty. 3
- For securing steering column switch to steering lock housing

6 Spring

7 Splined adapter sleeve
- Pulling off => Page 195
- Installing => Page 200

8 Hexagon combi-nut, 50Nm

9 Hexagon socket head bolt, 10 Nm

10 Thrust washer

11 Packing plate

12 Shear bolt
- Tighten until head shears off
- Drill out to remove

Warning!
Wear protective goggles!

satelettronica

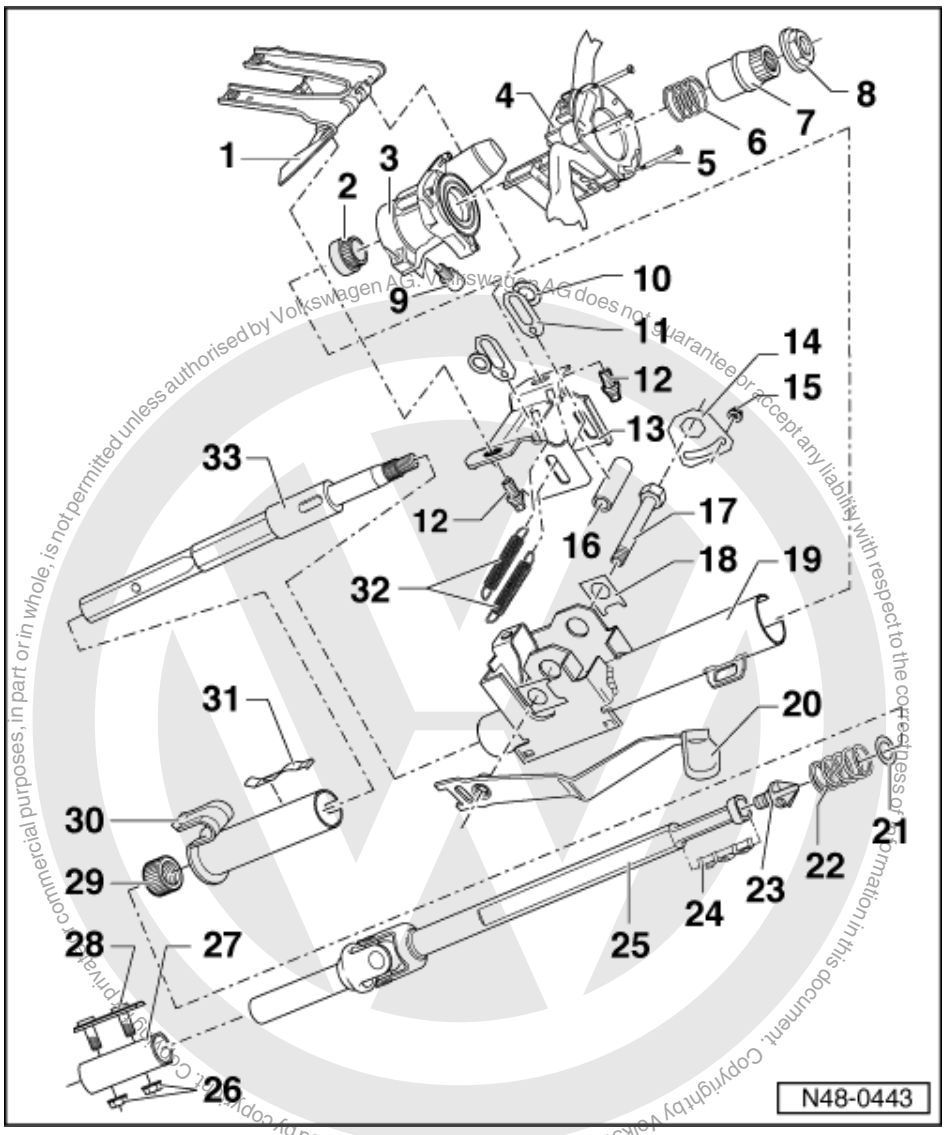

13 Mounting bracket
- Before assembling, coat side sliding surfaces with MoS2 paste

14 Locking plate

15 Locking plate nut, 8 Nm
- Self-locking
- Renew

16 Clamping sleeve

17 Clamping bolt with left-hand thread
- Tighten to 22 Nm, lever on upper stop
- After tightening fit locking plate

18 Packing plate

19 Column tube, upper part

Protected by copyright. Copyright by Volkswagen AG. Volkswagen AG does not guarantee or accept any liability with respect to the correctness of information in this document. Copying for private or commercial purposes, in part or in whole, is not permitted unless authorised by Volkswagen AG.
satelettronica

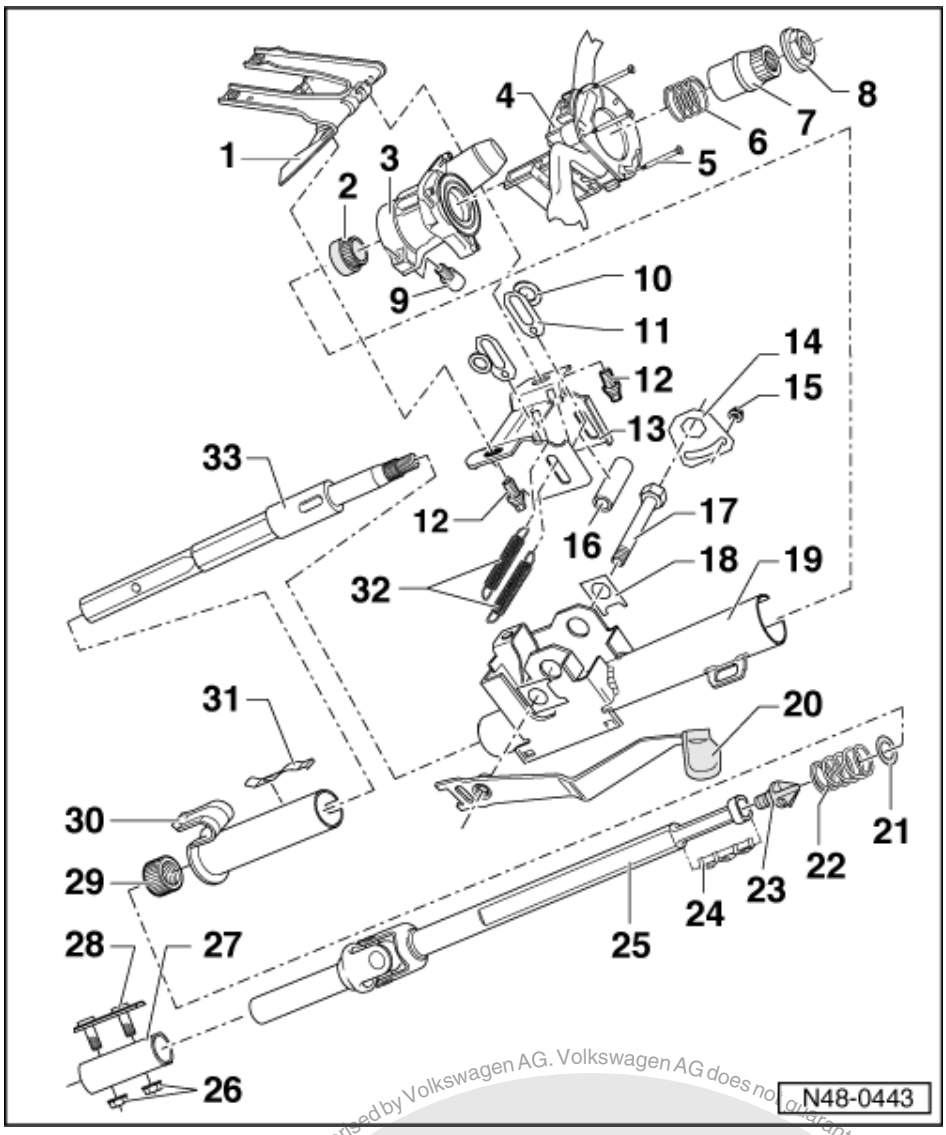

20 Operating lever
21 Rubber ring
22 Lower spring
23 Assembly drift
24 Securing spring
- Renew each time after removing

25 Steering column lower section with universal joint shaft
26 Hexagon nut, 25 Nm
27 Connecting sleeve
28 Connecting piece
29 Lower steering column bearing
- Drive out using drift VW 295
- Drive in with synthetic head hammer

Protected by copyright. Copying for private or commercial purposes, in any form or medium, is not permitted unless authorised by Volkswagen AG. Volkswagen AG does not guarantee or accept any liability with respect to the correctness of information in this document. Copyright by Volkswagen AG.
satelettronica

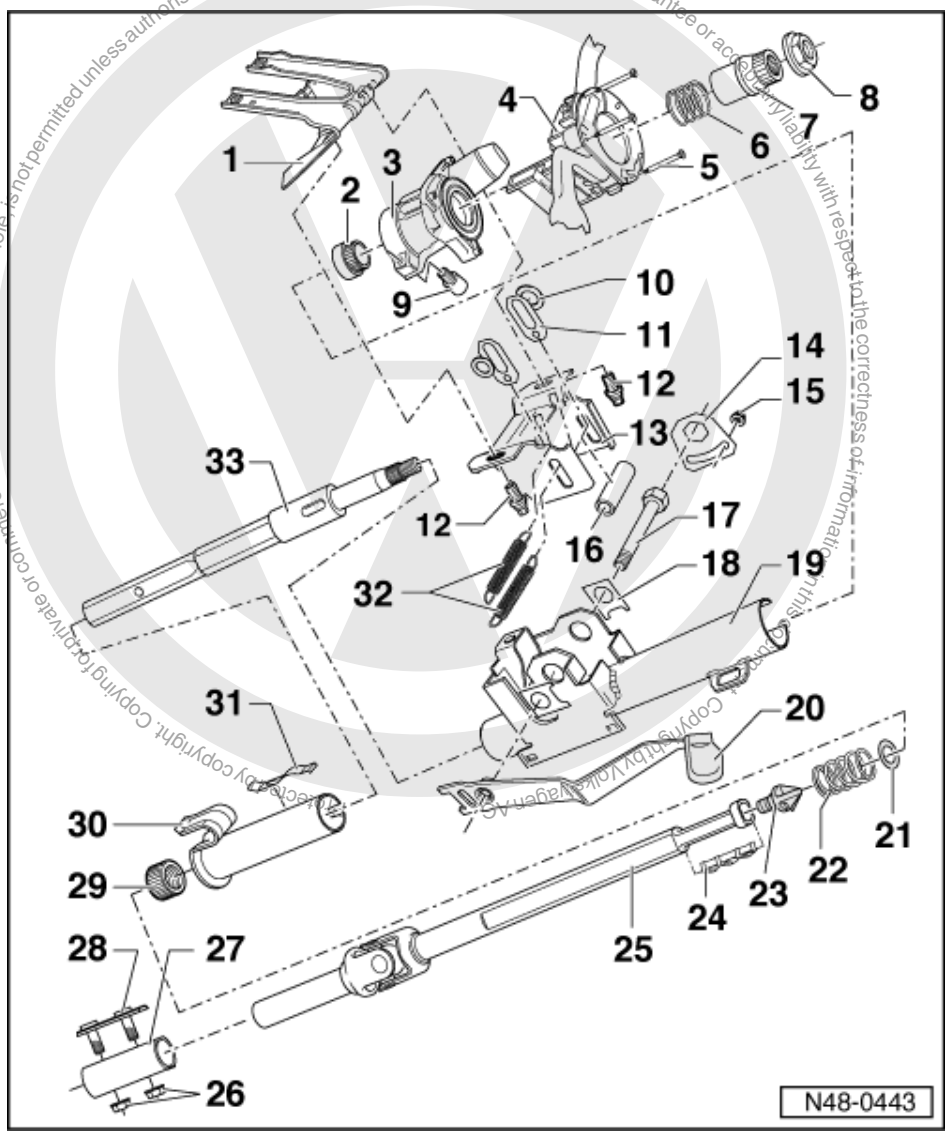

30 Column tube, lower part

31 Securing spring

- Renew each time after removing

32 Spring

33 Steering column upper section

- With torque overload clutch, cannot be dismantled
  If a moment of over 100 Nm is exerted on steering wheel then the steering column will also turn without damaging the locking pin.

satelettronica

2.7 - Dismantling column tube and steering column

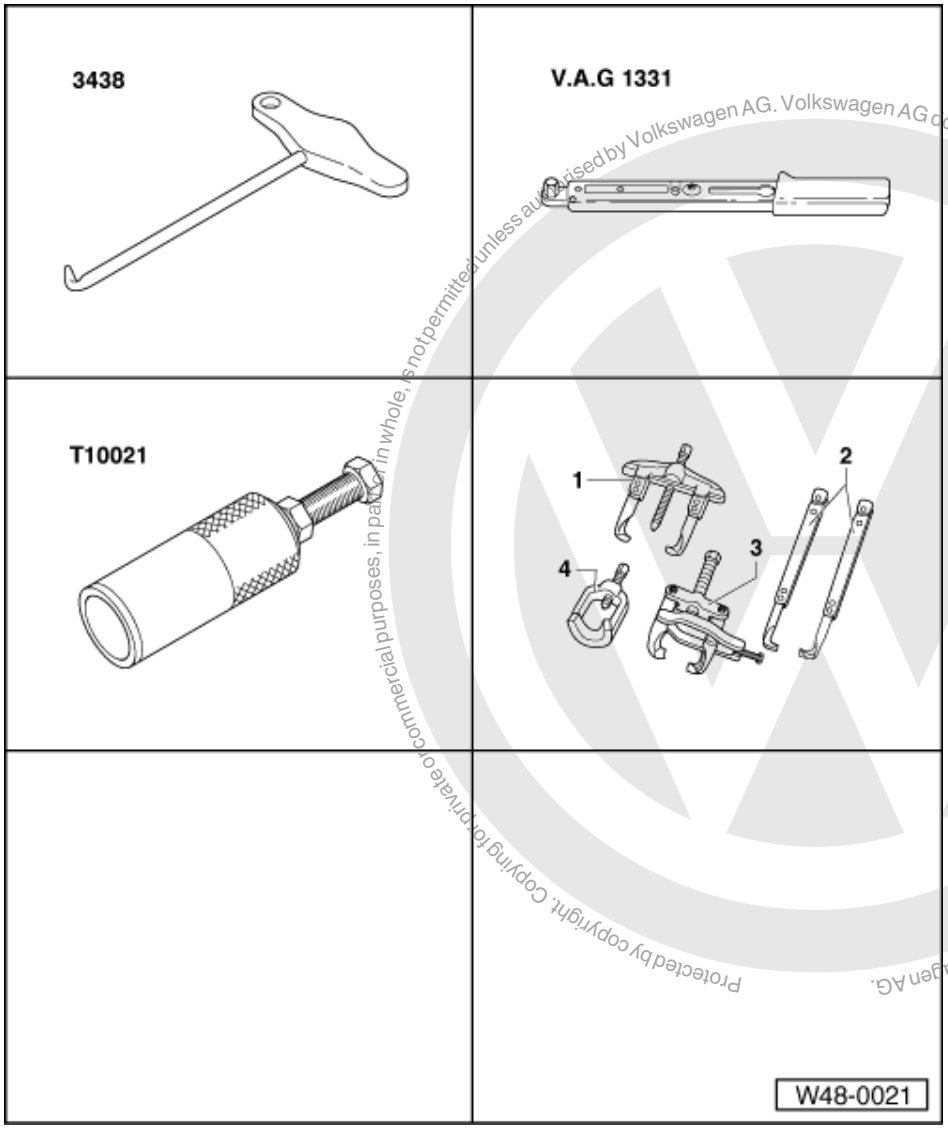

Protected by copyright. Copying for private or commercial purposes, in part or in whole, is not permitted unless authorised by Volkswagen AG. Volkswagen AG does not guarantee or accept any liability with respect to the correctness of information in this document. Copyright by Volkswagen AG.

satelettronica

Special tools and workshop equipment required

- 3438 Hook
- V.A.G 1331 Torque wrench
- T10021 Tensioning device
- 3 - Kukko 204/2 Puller

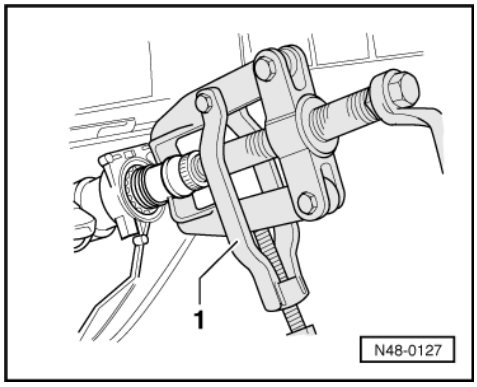

Column tube and steering column can only be dismantled once they had been removed from the vehicle.
Removing and installing column tube and steering column => Page 184 .

- -> Pulling off splined adapter sleeve.

Only use puller -1- with leg clamp e.g. Kukko 204-2 (commercial type).

Protected by copyright. Copying for private or commercial purposes, in part or in whole, is not permitted unless authorised by Volkswagen AG. Volkswagen AG does not guarantee or accept any liability with respect to the correctness of information in this document. Copyright by Volkswagen AG.

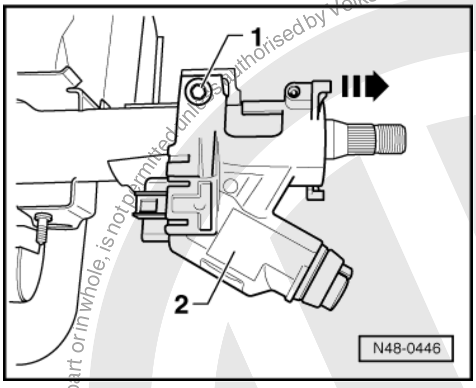

- -> Remove bolt -1- and pull steering lock housing -2- off column tube -2- in direction of arrow.

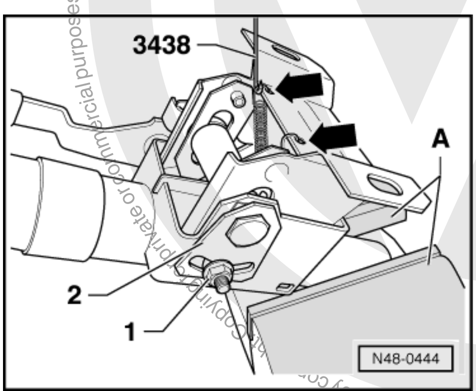

- -> Unhook springs -arrows- with special tool 3438.
- Remove locking plate nut -1- and take locking plate -2- off mounting bracket.

A - protective jaws

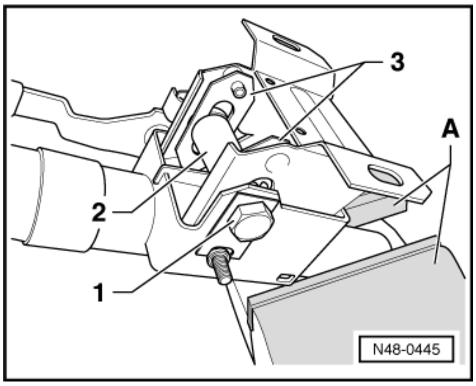

- -> Unbolt clamping bolt -1- (left-hand thread) from operating lever.
- Pull out clamping bolt -1-, removing clamping sleeve -2-, clamping plate -3- and washer.
- Remove mounting bracket from column tube.

satelettronica

Protected by copyright. Copying for private or commercial purposes, in part or in whole, is not permitted unless authorised by Volkswagen AG. Volkswagen AG does not guarantee or accept any liability with respect to the correctness of information in this document. Copyright by Volkswagen AG.

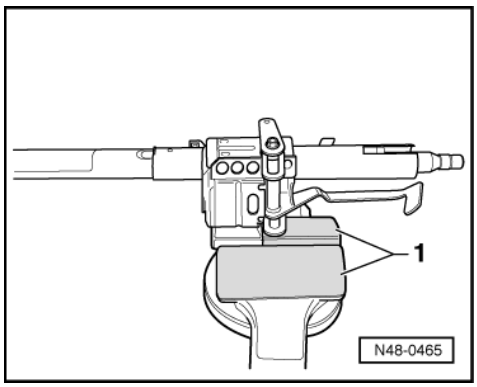

- -> Secure column tube upper part in vice with protective jaws -1-.

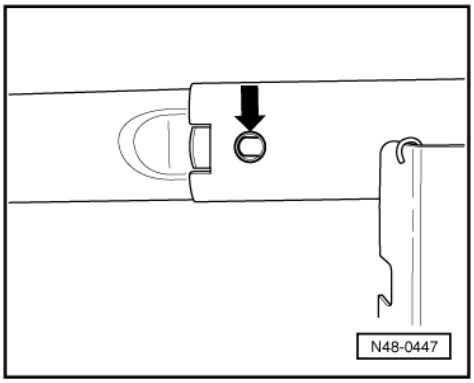

- -> Release securing spring -arrow- and separate column tube.

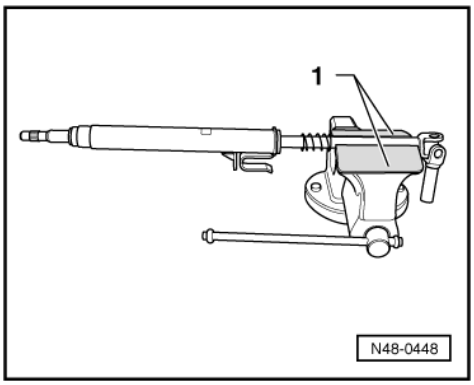

- -> Secure steering column lower part in vice with protective jaws.

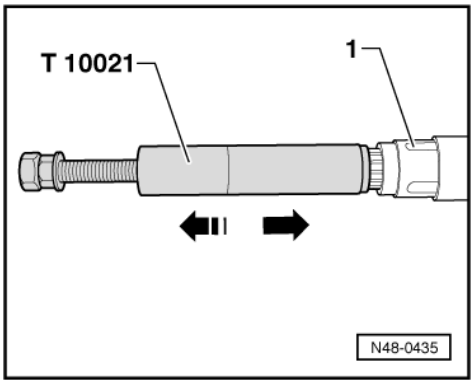

- -> Assemble clamping device T10021 (nut turned back as shown in illustration) and pull steering column apart.

satelettronica

- To do this, slide the sleeve forcibly back and forth on the threaded spindle -arrows- ensuring that the nut is struck forcibly.

The special tool T10021 is used as a slide hammer in this case.

- Continue hammering until the steering column is against its stop.

Now the securing spring stops them moving further apart.

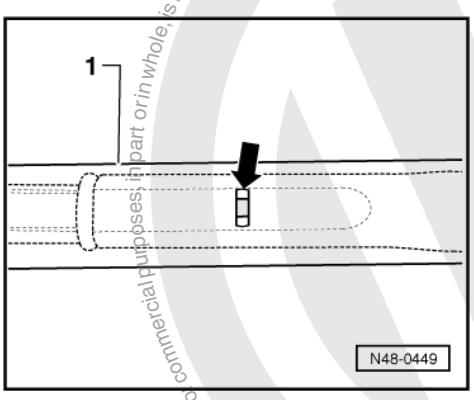

- Unclamp steering column.
- -> Release securing spring -arrow- through slot in column tube lower part -1- by striking drift lightly with hammer.
- Clamp steering column.
- Pull steering column apart completely.
- Pull steering column lower part out of column tube lower part.
- Take rubber ring and spreader rivet pin out of column tube lower part.

2.8 - Assembling column tube and steering column

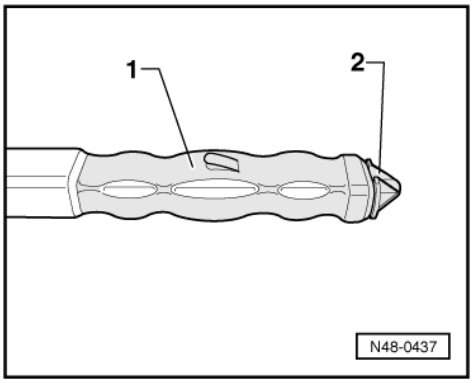

- Slide lower spring onto lower steering column.
- Grease seat of securing spring on steering column and securing spring all-round using universal grease G 052 735 A2.
- -> Fit securing spring -1- and assembly aid -2-.

Fitting position: There is a notch in one side of steering column into which the securing spring must be inserted.

Protected by copyright. Copyright by Volkswagen AG. Volkswagen AG does not guarantee or accept any liability with respect to the correctness of information in this document. Copyright by Volkswagen AG. Commercial purposes, in part or in whole, is not permitted unless authorised by Volkswagen AG.
satelettronica

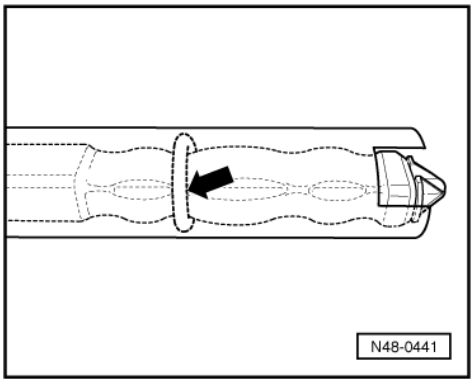

- -> Push on rubber ring -arrow-.
- Insert lower steering column in column tube lower part.

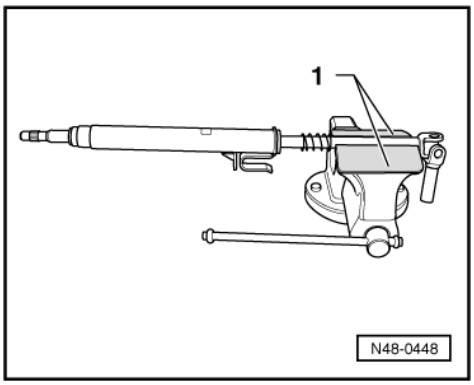

- -> Connect steering columns together and clamp.

A - Protective jaws

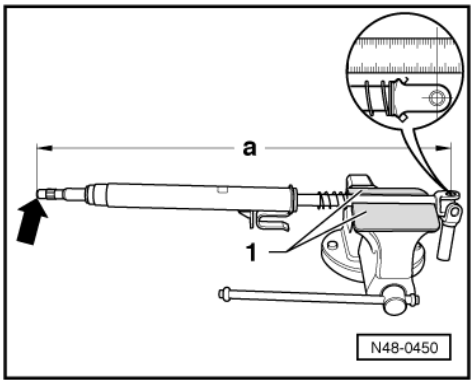

- -> Set steering columns to dimension "a".

Dimension "a" = 610 mm

A - Protective jaws

Protected by copyright. Copying for private or commercial purposes, in part or in whole, is not permitted unless authorised by Volkswagen AG. Volkswagen AG does not guarantee or accept any liability with respect to the correctness of information in this document. Copyright by Volkswagen AG.
satelettronica

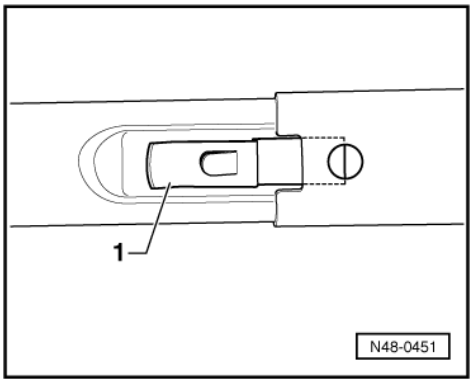

- -> Insert securing spring -1- into column tube lower part and join column tube parts.

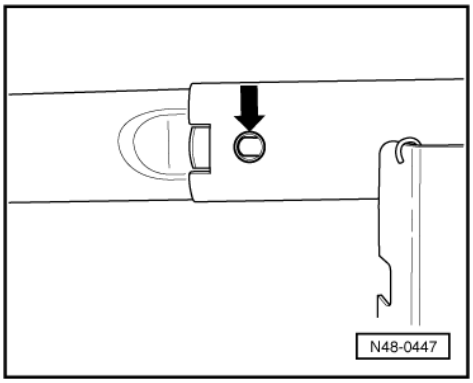

- -> Push column tube parts together until tab -arrow- engages.

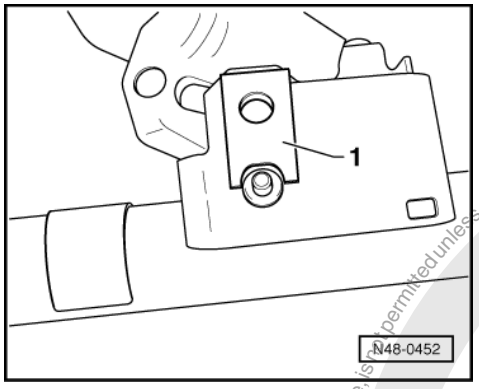

- -> Lightly coat back side of packing plate -1- with MoS2 paste and put it on column tube mounting bracket.

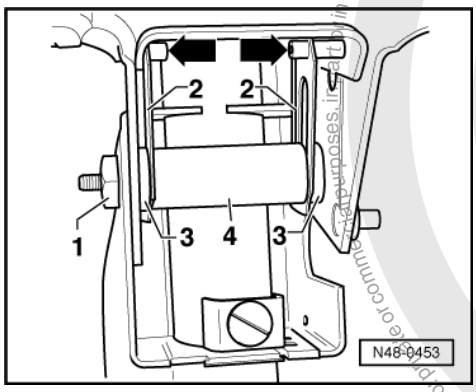

- -> Insert mounting bracket in mounting on column tube.
- Insert clamping bolt -1- with clamping plates -2-, washers -3- and clamping sleeve -4-.

satelettronica
Protected by copyright. Copyright by Volkswagen AG.
Copyright by Volkswagen AG. Volkswagen AG does not guarantee or accept any liability with respect to the correctness of information in this document.
Copying for private or commercial purposes, in part or in whole, is not permitted unless authorised by Volkswagen AG.

Observe installation position: clamping plate tabs must be guided under pins (arrows).

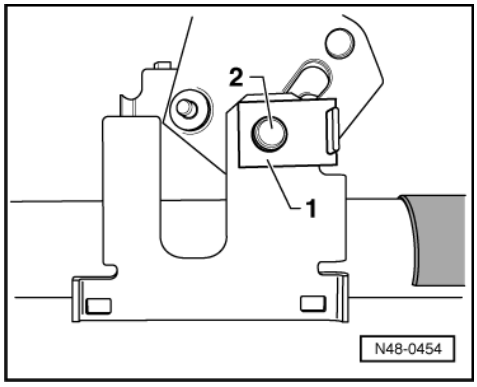

- -> Lightly coat back side of packing plate -1- with MoS2 paste and put it on column tube mounting bracket.
- Bolt clamping bolt (left-hand thread) -2- to operating lever for height adjustment.
- Position operating lever against upper stop and tighten clamping bolt (left-hand thread) to 22 ... 24 Nm.

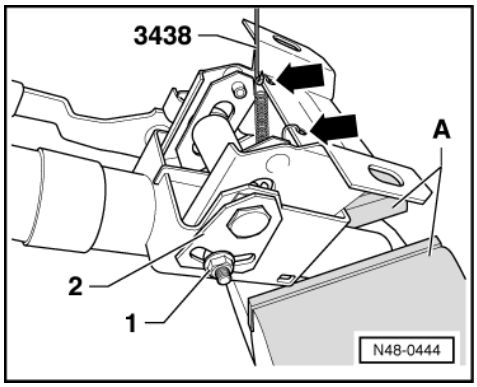

- -> Put locking plate -2- on clamping bolt and secure with nut -1-, tightening to 8 Nm.
- Hook spring in using special tool 3438.

A - protective jaws

- Slide support ring onto steering column.
- Fit steering lock housing and bolt loosely together with hexagon socket head bolt.
- Fit upper spring onto steering column.

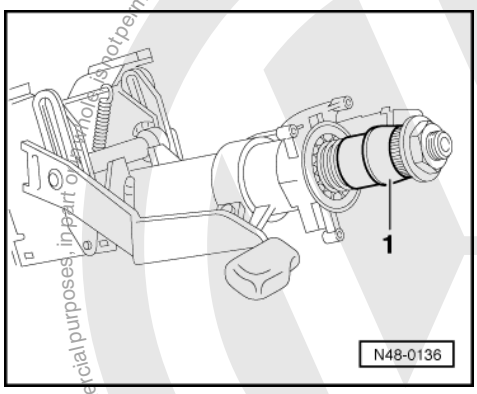

- -> Place splined adapter sleeve -1- on steering column and fit hexagon combi-nut to steering column.
- Tighten hexagon nut on steering column to 50 Nm.
- Remove nut again.
- Install steering column with column tube in vehicle.
- Tighten shear-head bolts for column tube until head shears off.

Protected by copyright. Copying for commercial purposes, in part or in whole, is not permitted unless authorised by Volkswagen AG. Volkswagen AG does not guarantee or accept any liability with respect to the correctness of information in this document. Copyright by Volkswagen AG.
satelettronica

Protected by copyright. Copying for private or commercial purposes, in part or in whole, is not permitted unless authorised by Volkswagen AG. Volkswagen AG does not guarantee or accept any liability with respect to the correctness of information in this document. Copyright by Volkswagen AG.

Checking distance between steering wheel and steering lock housing trim

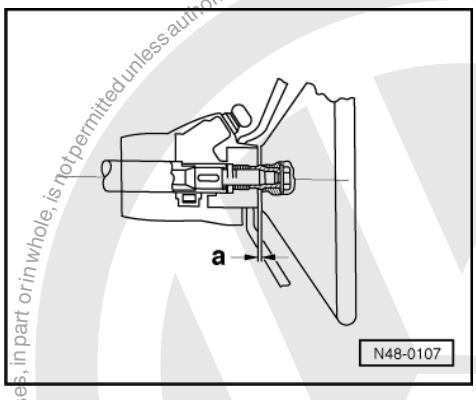

Steering column switch and steering wheel installed

- -> Adjust to dimension -a- by moving steering lock housing.

Dimension -a-: 2.0 ... 5.5 mm

- Tighten hexagon socket head bolt for steering lock housing to 10 Nm.

satelettronica

3 - Servicing power assisted steering

3.1 - Servicing power assisted steering

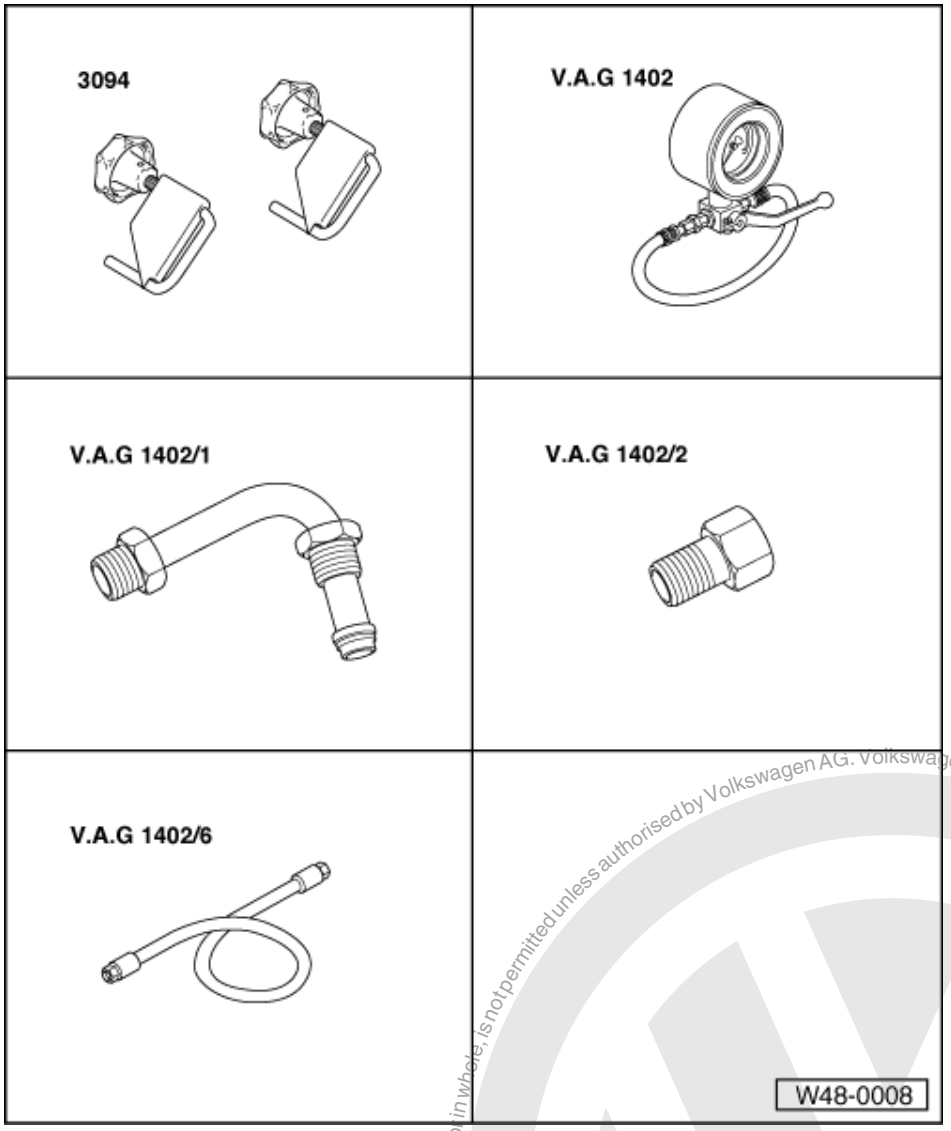

3.2 - Checking vane pump delivery pressure

Special tools and workshop equipment required

- 3094 Hose clamps
- V.A.G 1402 Power steering test unit
- V.A.G 1402/1 Adapter
- V.A.G 1402/2 Adapter
- V.A.G 1402/6 Hose from adapter set

Additional information

- Fault finding; running gear

Protected by copyright. Copying for private or commercial purposes, in part or in whole, is not permitted unless authorised by Volkswagen AG. Volkswagen AG does not guarantee or accept any liability with respect to the correctness of information in this document. Copyright by Volkswagen AG.
satelettronica

Pump faults

=> Fault finding; Running gear No. 10; Faults in power-assisted steering

- Clamp supply line with hose clamp 3094.
- Disconnect pump pressure pipe.

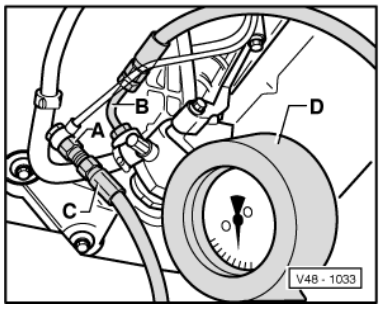

- -> Install adapter and test equipment. Cut-off valve on gauge open.
- Remove hose clamp 3094 from supply line.
- Start engine and if necessary add fluid to reservoir.

A - V.A.G 1402/2
B - V.A.G 1402/1
C - Hose from adapter kit 1402/6
D - V.A.G 1402

Test prerequisites:

- V-belt/V-belt tension OK.
- System not leaking.
- Hoses/pipes are not kinked or restricted.

- With engine running at idling speed. Close cut-off valve (not longer than 5 seconds) and read off pressure.
- Specification: 85 ... 95 bar

Notes:

- If the reading is higher or lower than specified renew pump:
- Removing and installing P.A.S. vane pump ‣ 09.99 =>from page 248 .
- Removing and installing P.A.S. vane pump 10.99 ‣ =>from page 259 .
- If reservoir fluid level is low then check steering system for leaks.
- For leaks at the pinion first check the pipes/pipe connections for leaks and if necessary tighten and wipe dry.
- If the pinion seal or the rack seals in steering box housing are leaking then renew steering box.

- To check the rack seals loosen the hose clip on the bellows and push bellows to one side.

3.3 - Removing and installing power assisted steering box

Instructions when working on the power assisted steering box

- Absolute cleanliness is required when working on the power assisted steering.
- Thoroughly clean connections and immediate vicinity before loosening.
- Place parts on a clean surface and cover if not re-installing immediately.
- Do not use fluffy cloth.
- Only unpack parts immediately prior to fitting.
- Only use genuine packed parts.

Protected by copyright. Copyright by Volkswagen AG.
Reproduction for commercial purposes, in part or in whole, is not permitted unless authorised by Volkswagen AG. Volkswagen AG does not guarantee or accept any liability with respect to the correctness of information in this document.
satelettronica

- Disposal

=> Special information; Running gear No.2; Environmentally friendly and economical recycling of oil-filled old parts

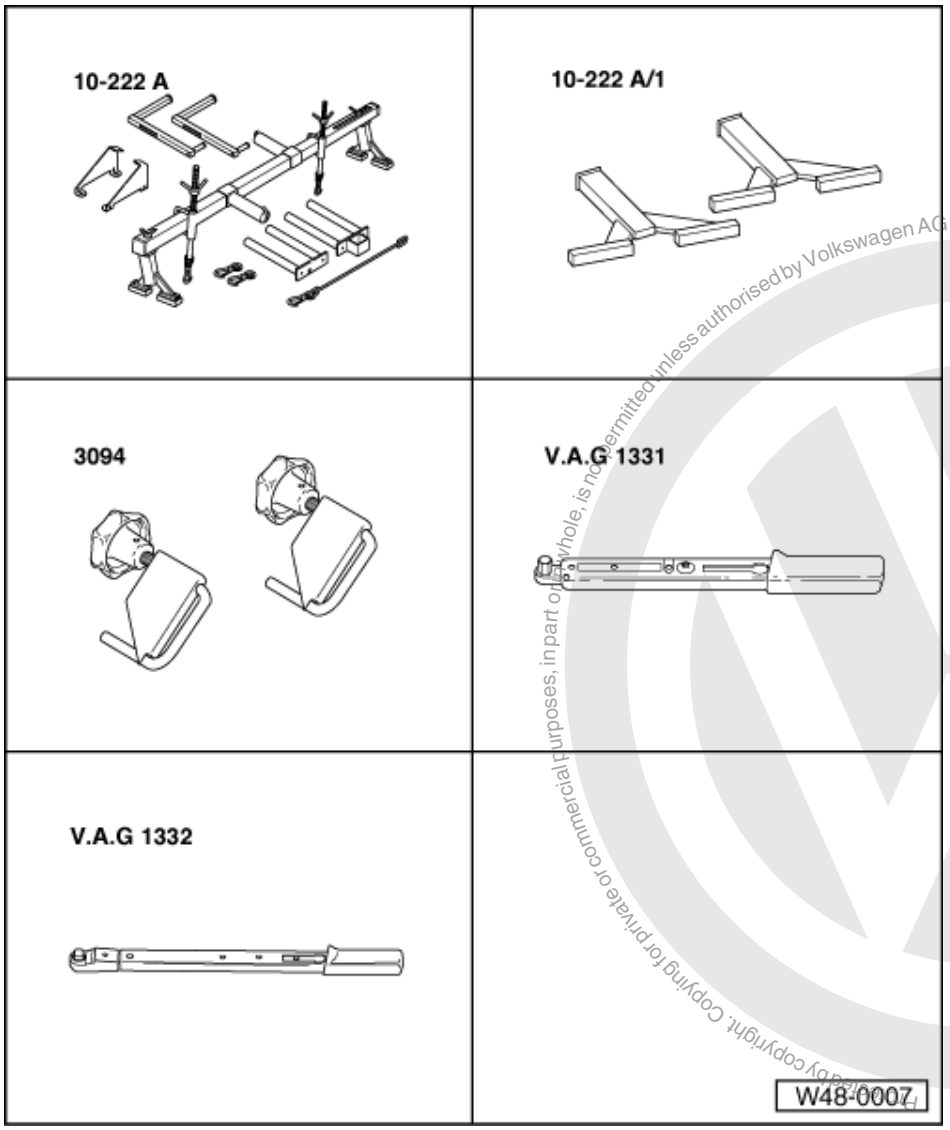

Reproduced by copyright. Copying for private or commercial purposes, in part or in whole, is not permitted unless authorised by Volkswagen AG. Volkswagen AG does not guarantee or accept any liability with respect to the correctness of information in this document. Copyright by Volkswagen AG.
satelettronica

Special tools and workshop equipment required

- 10-222 A Support
- 10-222 A/1 Support
- 3094 Hose clamps
- V.A.G 1331 Torque wrench
- V.A.G 1332 Torque wrench

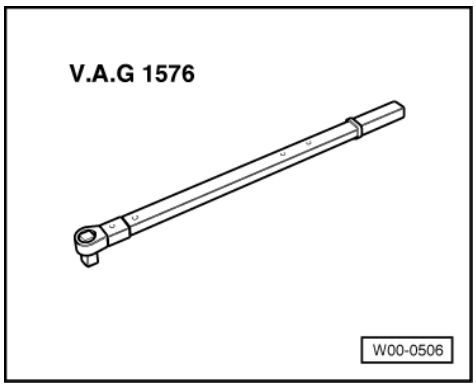

- V.A.G 1576 Torque wrench

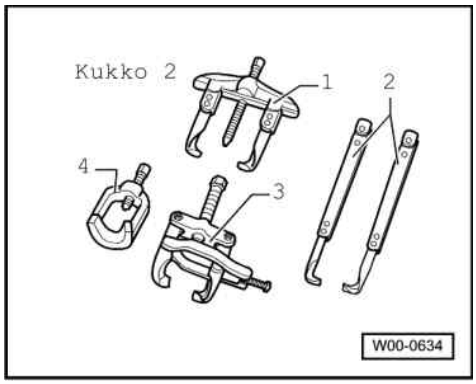

- 4 - Kukko 128/2 Ball joint splitter

Additional information

- Workshop Manual Caddy 1996 ▸, Polo Classic 1996 ▸, Polo Estate 1998 ▸, Engine mechanics
- Special information, running gear

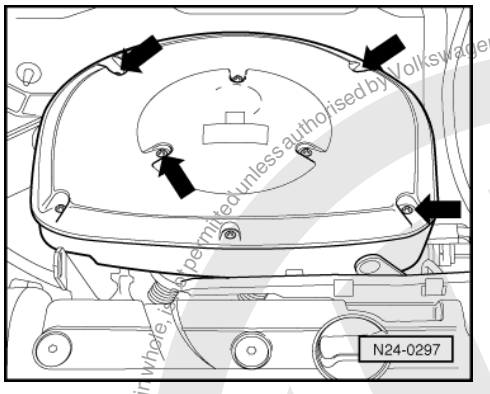

Removing

- Lift vehicle until the load on the front axle is relieved.
- Loosen hexagon nuts on drive shafts.
- Remove cover from engine, if part of original equipment.
- -> Remove the air cleaner (only on vehicles with oval air cleaner). To do this remove the screws indicated by the arrows.

satelettronica
Protected by copyright. Copying for private or commercial purposes, in part or in whole, is not permitted unless authorised by Volkswagen AG. Volkswagen AG does not guarantee or accept any liability with respect to the correctness of information in this document. Copyright by Volkswagen AG.

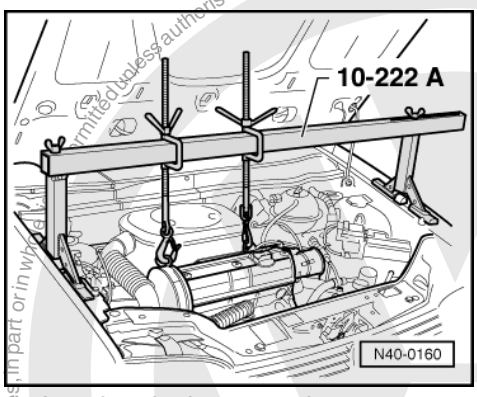

- Lay the air cleaner to the rear.
- -> Fit support bar 10-222A together with legs 10-222 A/1.

Note:

Before fitting the support hooks of the support bar, remove hose and wire connections from engine in the area of the lifting eyes, so that they are not damaged.

- Take weight of engine/gearbox assembly on the spindles.

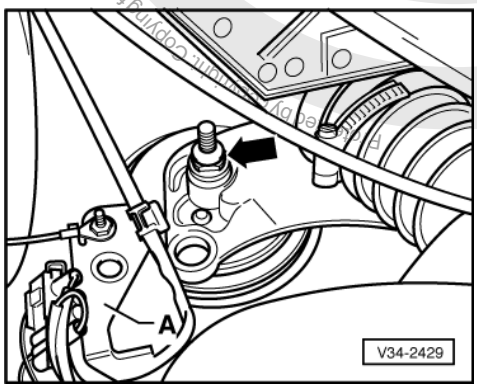

- -> Remove bolt (arrow) on engine console/sub-frame, right. If fitted remove connector mounting plate -A-.

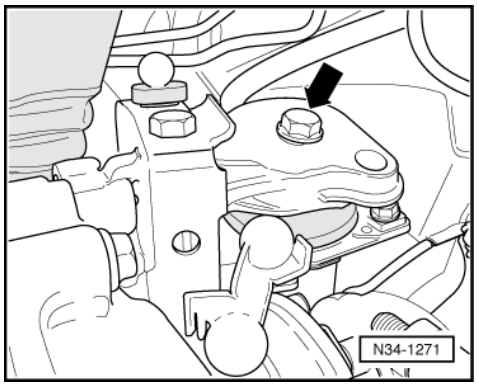

- -> Unbolt hexagon bolt (arrow) on left gearbox assembly mounting.

satelettronica

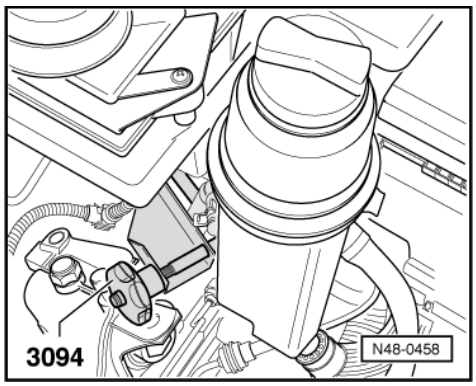

- -> Clamp hose from reservoir with hose clamp 3094.

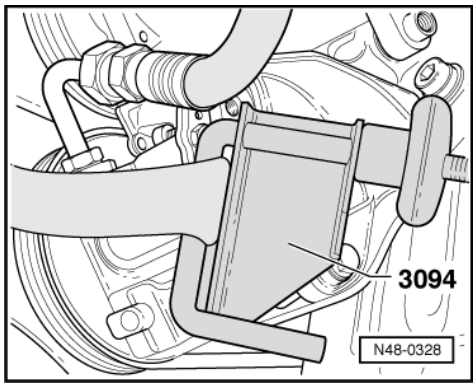

- -> Clamp hose on vane pump with hose clamp 3094.

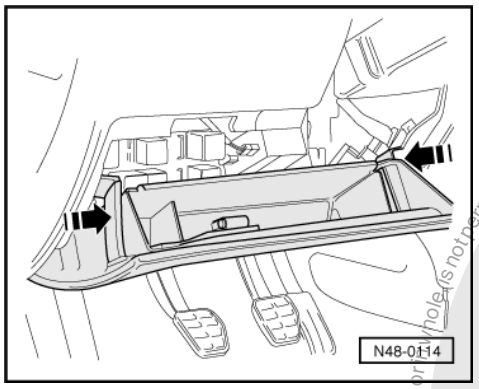

Vehicles ▸ 09.99

- -> Press stowage compartment clips together in direction of arrows.
- Fold stowage compartment down and pull out towards rear.

Protected by copyright. Copying for private or commercial purposes, in part or in whole, is not permitted unless authorised by Volkswagen AG. Volkswagen AG does not guarantee or accept any liability with respect to the correctness of information in this document. Copyright by Volkswagen AG.
satelettronica

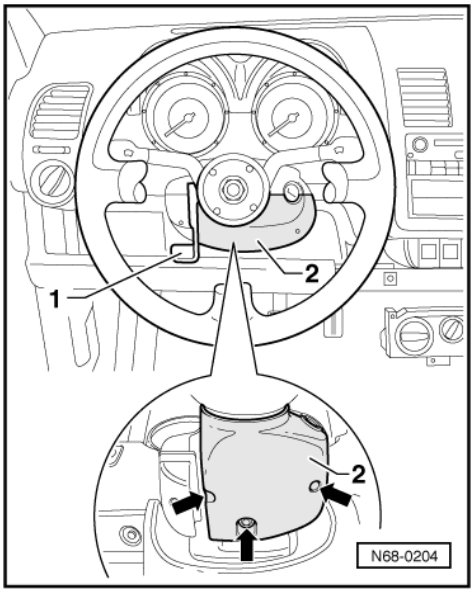

Vehicles 10.99 ▸

- -> Release steering wheel height adjustment -1- and put steering wheel in highest position.
- Remove bolts -1-.
- Take off lower steering column switch trim -2-.

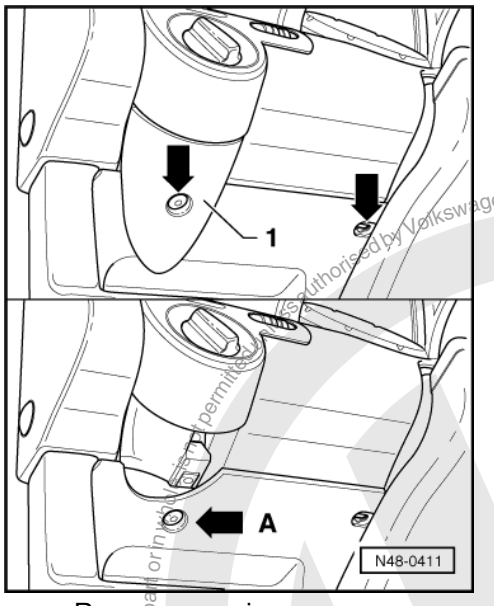

- -> Remove securing screws -arrows-.
- Take off cover -1-.
- Remove securing screw right of steering column.
- Remove screw -arrow A-.

Protected by copyright. Copying for private or commercial purposes, partial or in whole, is not permitted unless authorised by Volkswagen AG. Volkswagen AG does not guarantee or accept any liability with respect to the correctness of information in this document. Copyright by Volkswagen AG.
satelettronica

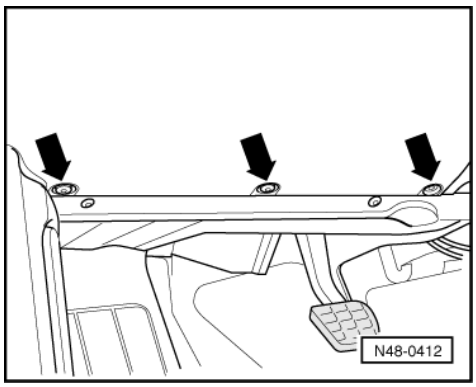

- -> Remove securing screws -arrows-.
- Remove stowage compartment.

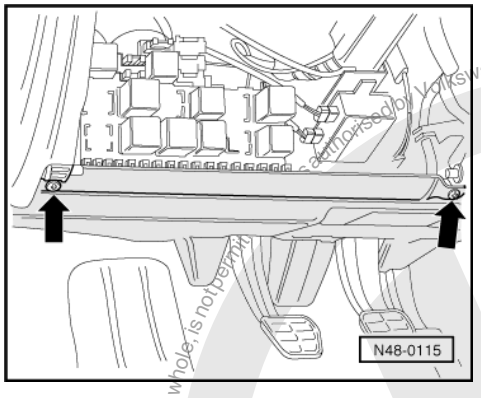

Continued for all vehicles

- -> Removing footwell cover.

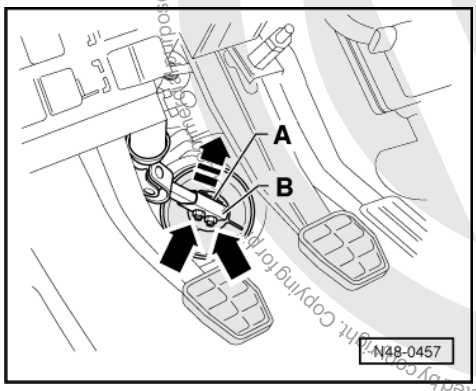

- -> Unscrew nuts -arrows- and pull connecting piece -A- out of connecting sleeve -B- in direction of arrow.
- Raise vehicle.
- Remove front wheels.
- Remove Lambda probe from front exhaust pipe if fitted.
- Removing front exhaust pipe.

=> Repair group 26; Removing and installing parts of exhaust system. Removing and installing parts of exhaust system.

satelettronica

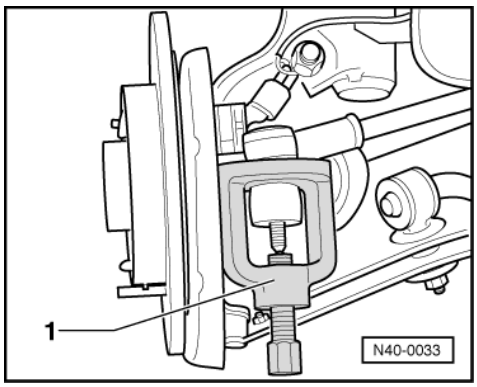

- -> Press track rods off steering arm.

1 - Ball joint splitter (commercial type e.g. Kukko No. 128/2)

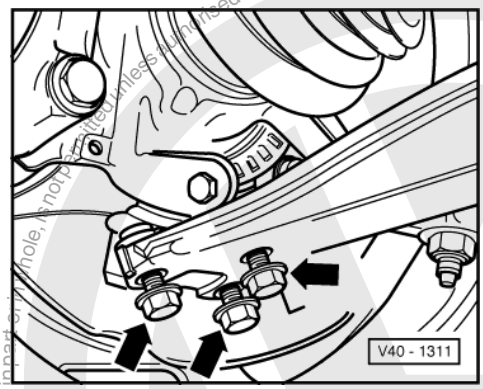

- Mark installation positions of swivel joint bolts on wishbone.
- -> Remove bolts (arrows).

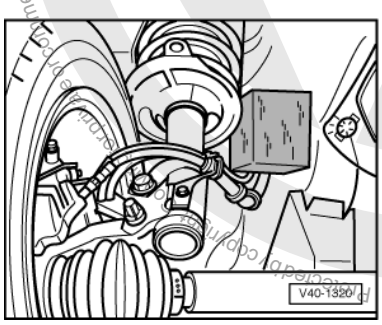

- -> On both sides, swing wheel with suspension struts outwards and support.
- If front exhaust pipe bracket is fitted to sub-frame, remove it.
- Remove bellows from seat on steering box.

satelettronica

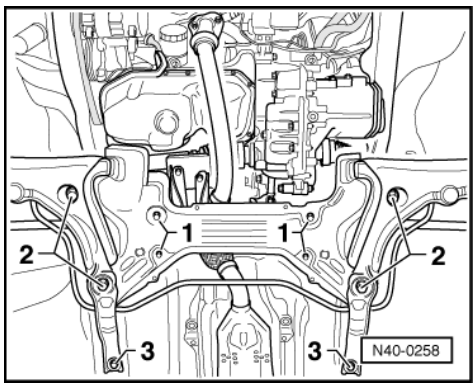

- -> Unbolt steering box from sub-frame -1- and secure e.g. with wire.
- Unclip power assisted steering feed and pressure pipes from retainer on assembly/gearbox mounting.
- Place gearbox jack V.A.G 1383 A under sub-frame.
- Remove bolts -2- and -3- for sub-frame.
- Lower sub-frame slightly using gearbox jack V.A.G 1383 A.

- Disconnect hoses from steering box and seal with plastic bag and adhesive tape.
- Seal power assisted steering box threaded holes with plastic sealing plugs.
  Instead of plastic sealing plugs a plug consisting of
  Part No. 113 301 229 A and banjo bolt
  Part No. N 904 674 01
  can be used. But when using these, several 16 mm ø sealing rings must be used so that the holes in the banjo bolt are sealed.
- Remove steering box securing nuts (bolts remain in subframe).
- Remove steering box to rear.

Installing

Install in reverse order.

Notes:

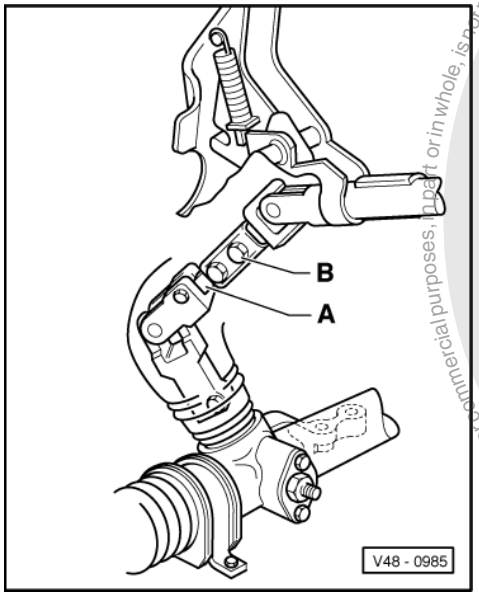

- Use new sealing rings for hose/line connections.
- -> When lifting the engine/gearbox assembly guide the lower half of the universal joint shaft -A- into the upper half -B- at the same time (second mechanic necessary).
- Coat bellows with lubricant e.g. soft soap before pulling onto steering box.
- Ensure sealing surfaces are clean.
- After fitting the steering box to the universal joint shaft ensure that the seal lies against the assembly plate without kinking and that the opening to the footwell is correctly sealed.

satelettronica
Copyright by Volkswagen AG. Volkswagen AG does not guarantee or accept any liability with respect to the correctness of information in this document. Copying for private or commercial purposes, in part or in whole, is not permitted unless authorised by Volkswagen AG.

Noises may be created and/or water may ingress.

Observe oil level in reservoir, after filling with hydraulic oil and starting engine. The oil level must sink.

If this is not the case, stop engine, unscrew pressure pipe at P.A.S. box and wait until hydraulic oil discharges.

- Attach pipe again and start engine, top-up oil level.
- Check front wheel alignment and position of steering wheel.

Tightening torques

Swivel joint to wishbone	35 Nm
Hex nut for drive shaft to wheel hub	265 Nm
Hexagon bolts for steering box/steering column connecting piece	25 Nm
P.A.S. box to sub-frame	30 Nm
Track rod to steering arm Use new hexagon nuts!	35 Nm

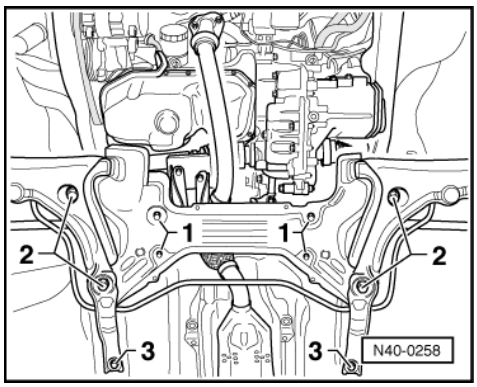

-> Sub-frame to body

1 - 30 Nm
2 - 70 Nm then 90°further
3 - 65 Nm

3.4 - Assembly overview: power assisted steering box (TRW)

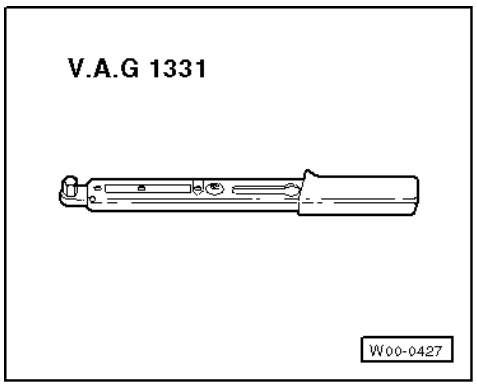

Special tools and workshop equipment required

- V.A.G 1331 Torque wrench

Protected by copyright. Copying for private or commercial purposes, in part or in whole, is not permitted unless authorised by Volkswagen AG. Volkswagen AG does not guarantee or accept any liability with respect to the correctness of information in this document. Copyright by Volkswagen AG.
satelettronica

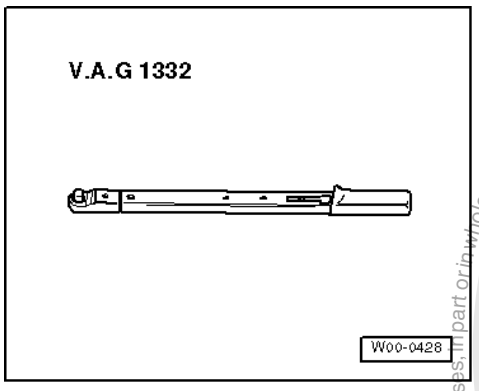

- V.A.G 1332 Torque wrench

Additional information

- Fault finding; running gear

For pump faults

=> Fault finding; Running gear No. 10; Faults in power-assisted steering

Notes:

- Renew self-locking nuts and bolts. Welding and straightening work on steering components is not permitted.
- To grease the rack only use steering box grease Part No. AOF 063 000 04.
- Renew self locking nuts and bolts.
- Type of oil: Hydraulic oil Part No. G 002 000
- Oil system capacity: 0.7 ... 0.9 ltr.
- Suction and pressure hose routing
  => Assembly overview: Vane pump, reservoir and hydraulic pipes ‣09.99 Page 245 .
- Suction and pressure hose routing
  => Assembly overview: Vane pump, reservoir and hydraulic pipes ‣ 10.99 Page 266 .

Protected by copyright. Copying for private or commercial purposes, in part or in whole, is not permitted unless authorised by Volkswagen AG. Volkswagen AG does not guarantee or accept any liability with respect to the correctness of information in this document. Copyright by Volkswagen AG.
satelettronica

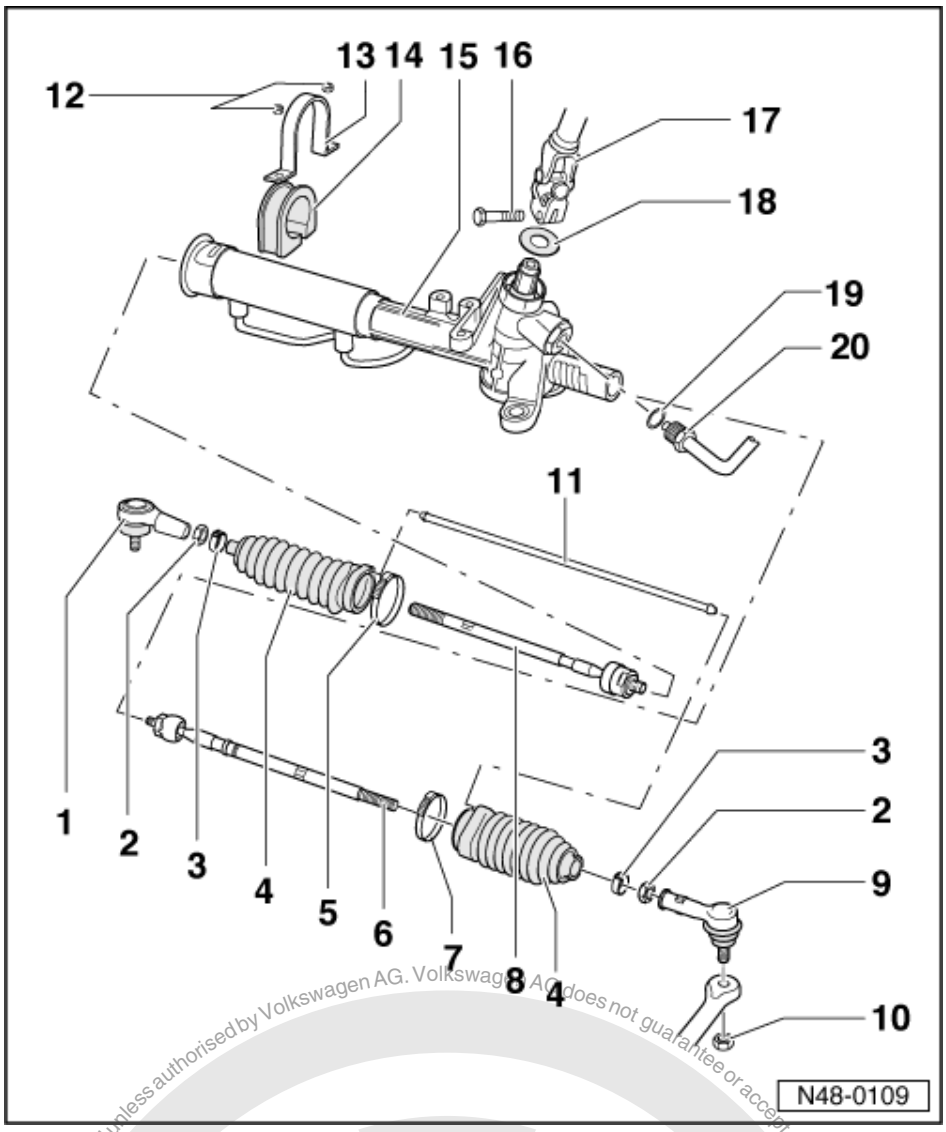

1 Right-hand rack rod ball joint
- Splitting =>Page 210
- Checking:

=> Maintenance

2 Hexagon nut, 50 Nm

3 Hose clip
- Renew - open with pliers
- Tensioning => Page 241

4 Bellows
- Pull on and off over track rod
- Can be replaced with steering box installed
- Must not be twisted after adjusting track

5 Hose clip
- Renew - open with pliers
- Tensioning => Page 241

Protected by copyright. Copying for private or commercial purposes, in part or whole is not permitted unless authorised by Volkswagen AG. Volkswagen AG does not guarantee or accept any liability with respect to the correctness of information in this document. Copyright by Volkswagen AG.

satelettronica

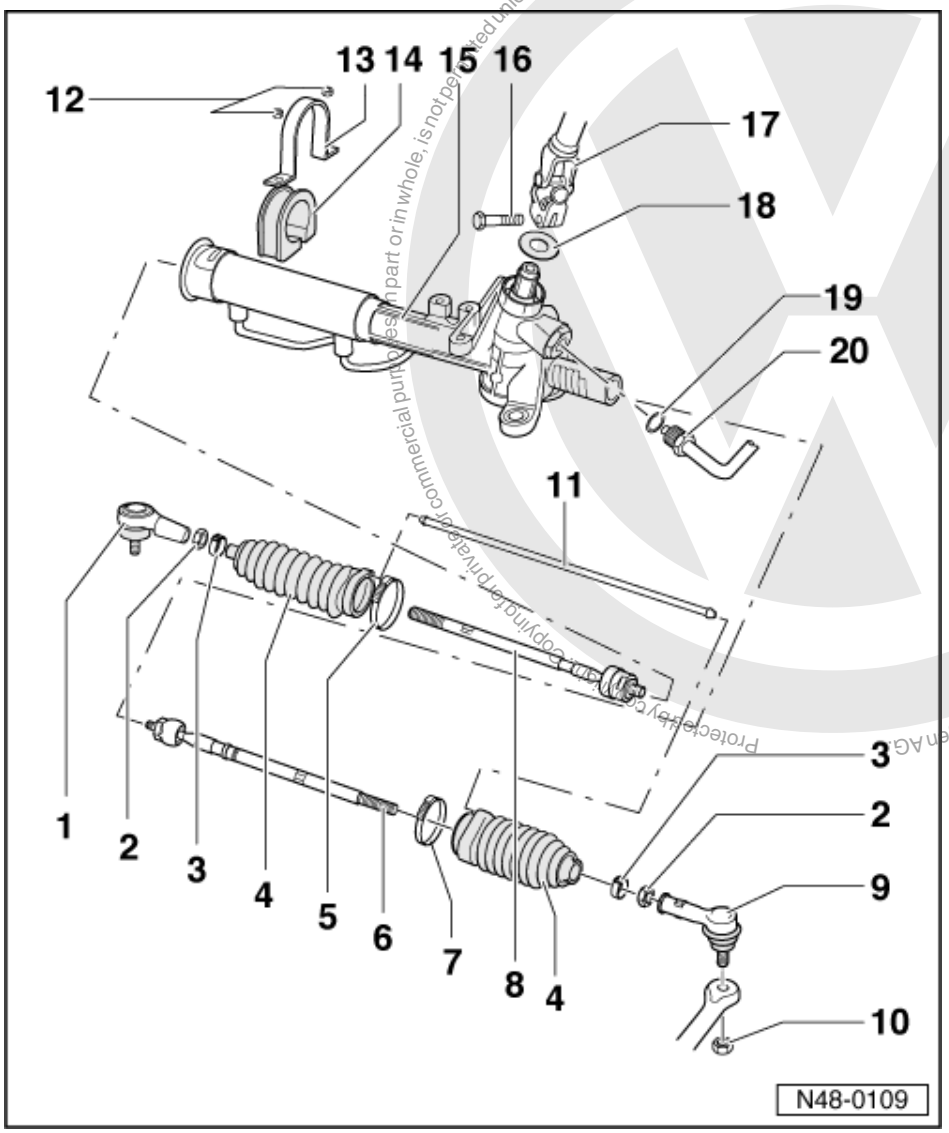

6 Left-hand track rod
- 70 Nm
- Removing and installing
  => Page 245
- Adjusting to length
  => Page 245

7 Hose clip
- Renew - open with pliers
- Tensioning => Page 241

8 Right-hand track rod
- 70 Nm
- Removing and installing
  => Page 245
- Vehicle alignment => Page 158

9 Left-hand track rod ball joint
- Splitting =>Page 210
- Checking:

=> Maintenance

10 Self-locking hexagon nut, 35 Nm

satelettronica

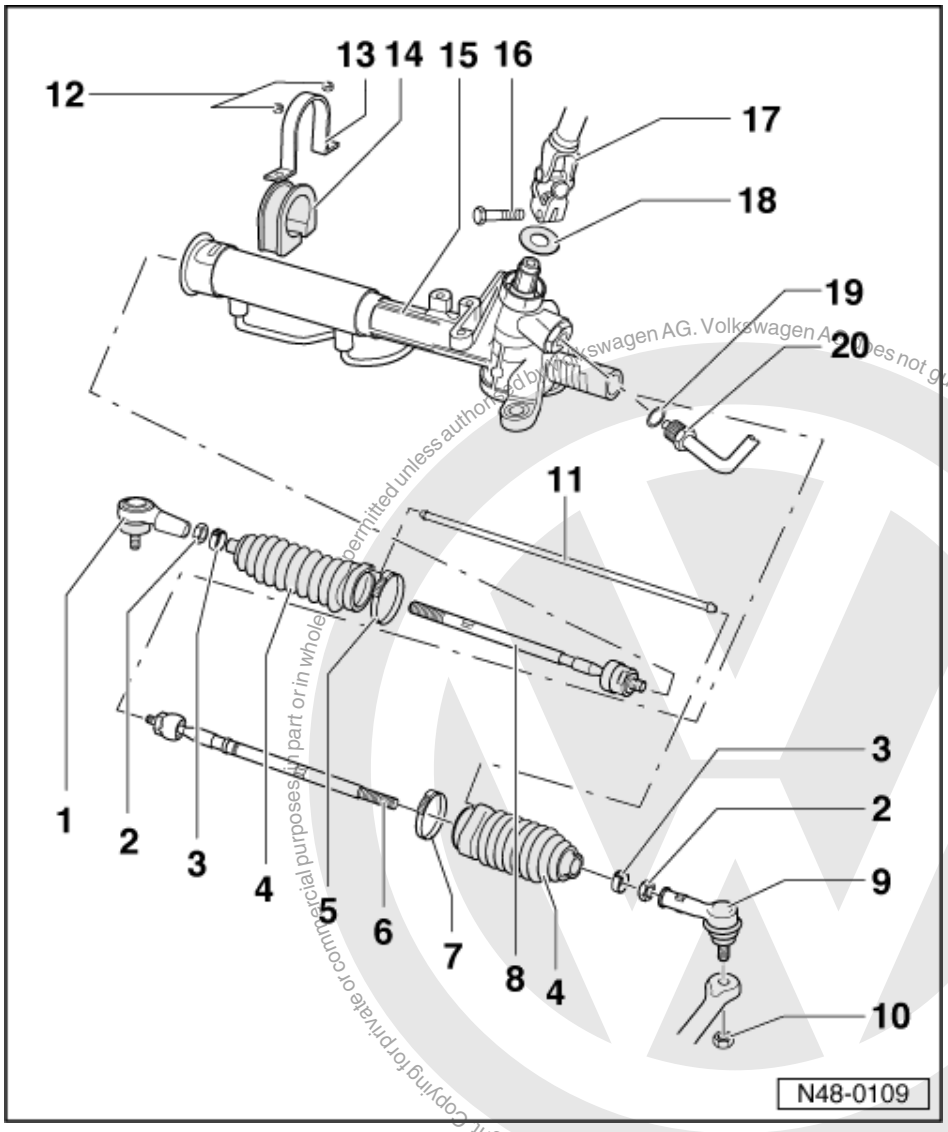

11 Pressure balancing pipe
- Check for damage (dents, kinks)

12 Self-locking hexagon nut, 30 Nm

13 Clamp

14 Rubber mounting

15 Steering box
- Removing and installing
  => Page 203
- Dismantling and assembling =>from page 226
- Adjusting => Page 241
- Checking steering moment

=> Fault finding; Running gear No. 10; Faults in power-assisted steering

16 Hexagon bolt, 30 Nm

17 Universal jointshaft
- Connection between steering column and steering box

18 Cover washer

Protected by copyright. Copying for private or commercial purposes, in part or in whole, is not permitted unless authorised by Volkswagen AG. Volkswagen AG does not guarantee or accept any liability with respect to the correctness of information in this document. Copyright by Volkswagen AG.
satelettronica

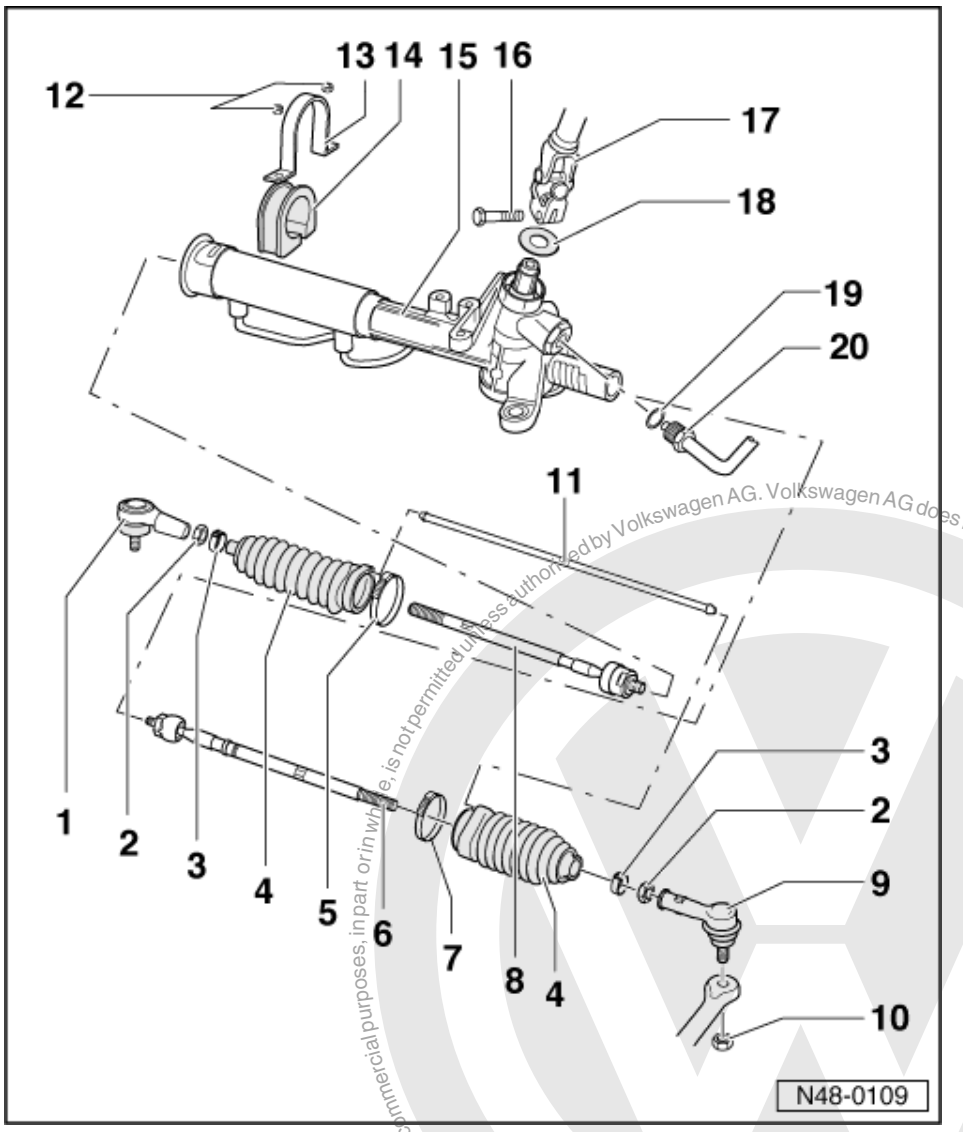

19 Sealing ring
- Renew

20 Union nut, 30 Nm

Protected by copyright. Copying for private or commercial purposes, in part or in whole, is not permitted unless authorised by Volkswagen AG. Volkswagen AG does not guarantee or accept any liability with respect to the correctness of information in this document. Copyright by Volkswagen AG.
satelettronica

3.5 - Servicing TRW power-assisted steering

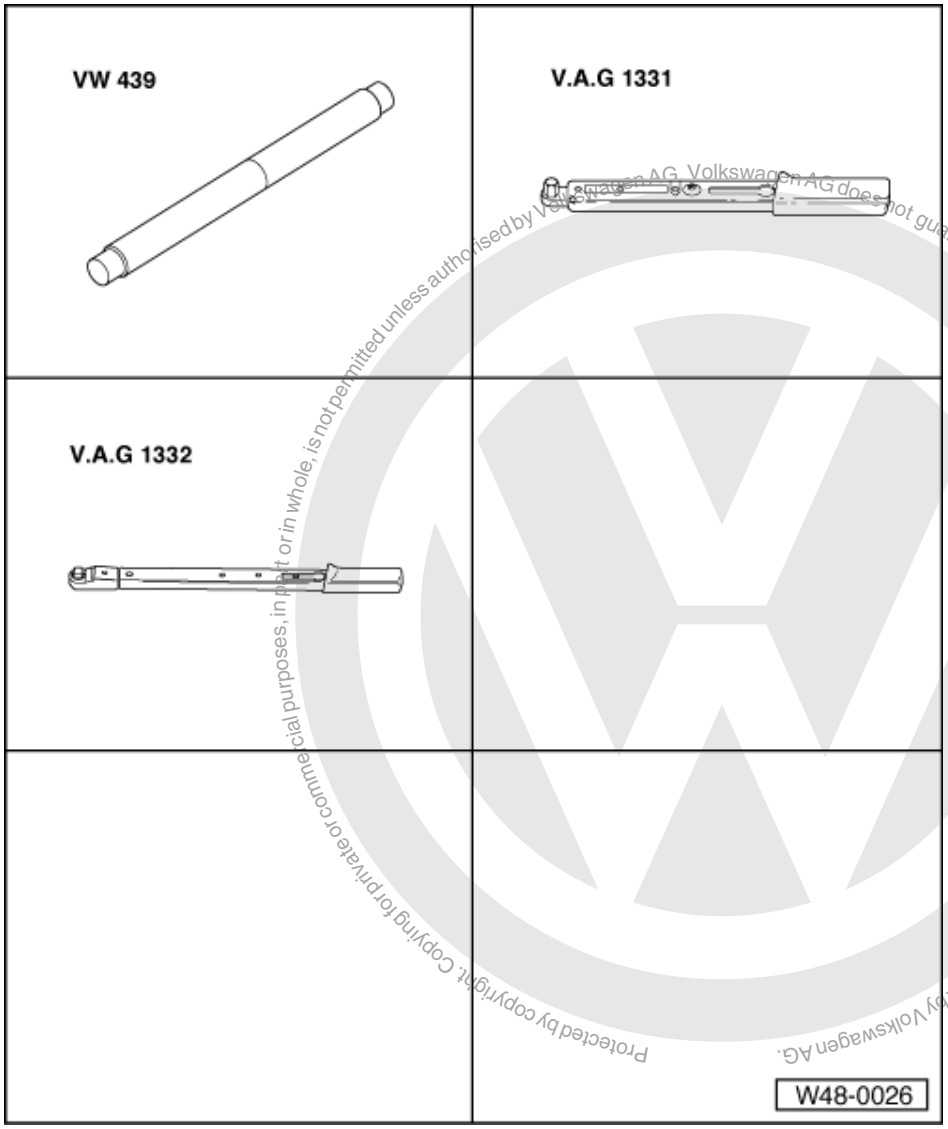

Protected by copyright. Copying for private or commercial purposes, in part or in whole, is not permitted unless authorised by Volkswagen AG. Volkswagen AG does not guarantee or accept any liability with respect to the correctness of information in this document. Copyright by Volkswagen AG.

satelettronica

Special tools and workshop equipment required

- VW 439 Guide pin
- V.A.G 1331 Torque wrench
- V.A.G 1332 Torque wrench

This repair is restricted to replacing the seals and if necessary the rack. Steering boxes which have been damaged in an accident must always be replaced!

For problem-free and successful repairs the greatest possible consciousness, cleanliness, expertise and the correct tools in good condition are necessary.

Notes:

- Thoroughly clean hose connections and their immediate vicinity before loosening.
- Thoroughly clean work place (bench, vice) before commencing work and if necessary cover work surface e.g. with paper towels.
- Only place parts which have been removed on a clean surface. If the repair cannot be completed immediately, cover parts.
- Do not use fluffy cloths.
- Only unpack replacement parts immediately before fitting.
- Only use genuine packed parts.

- Corroded racks must not be reused.

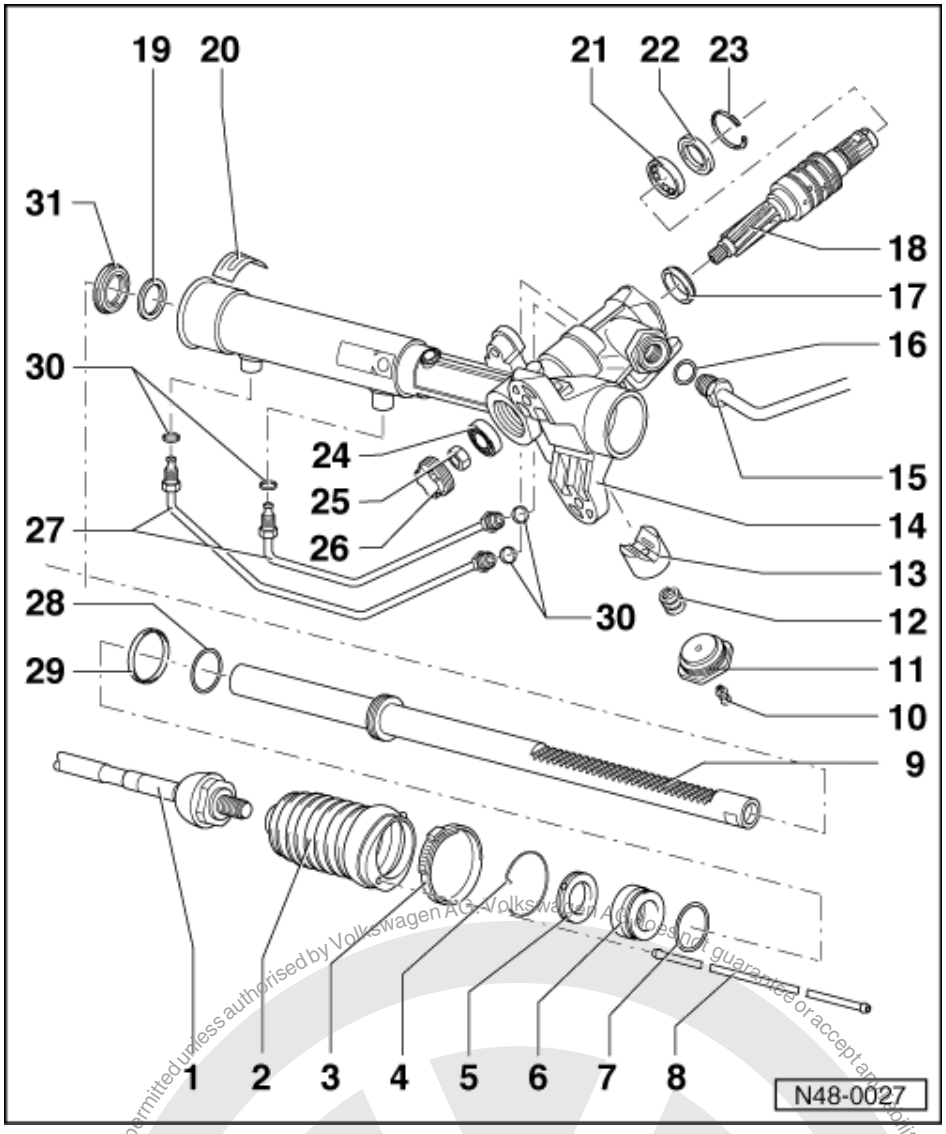

1 Track rod
- Repair information => Page 245
- Removing => Page 227
- Installing => Page 238

2 Bellows
- Installing => Page 240
- Installation position => Page 240

3 Hose clip
- Open with pliers
- Installation position => Page 241
- Tensioning => Page 241
- Renew

4 Circlip
- Removing => Page 230
- Installing => Page 236
- Renew

5 Securing ring
- Removing => Page 230

Protected by copyright. Copying for private or commercial purposes, in part or in whole, is not permitted unless authorised by Volkswagen AG. Volkswagen AG does not guarantee or accept any liability with respect to the correctness of information in this document. Copyright by Volkswagen AG.
satelettronica

- Installing => Page 236

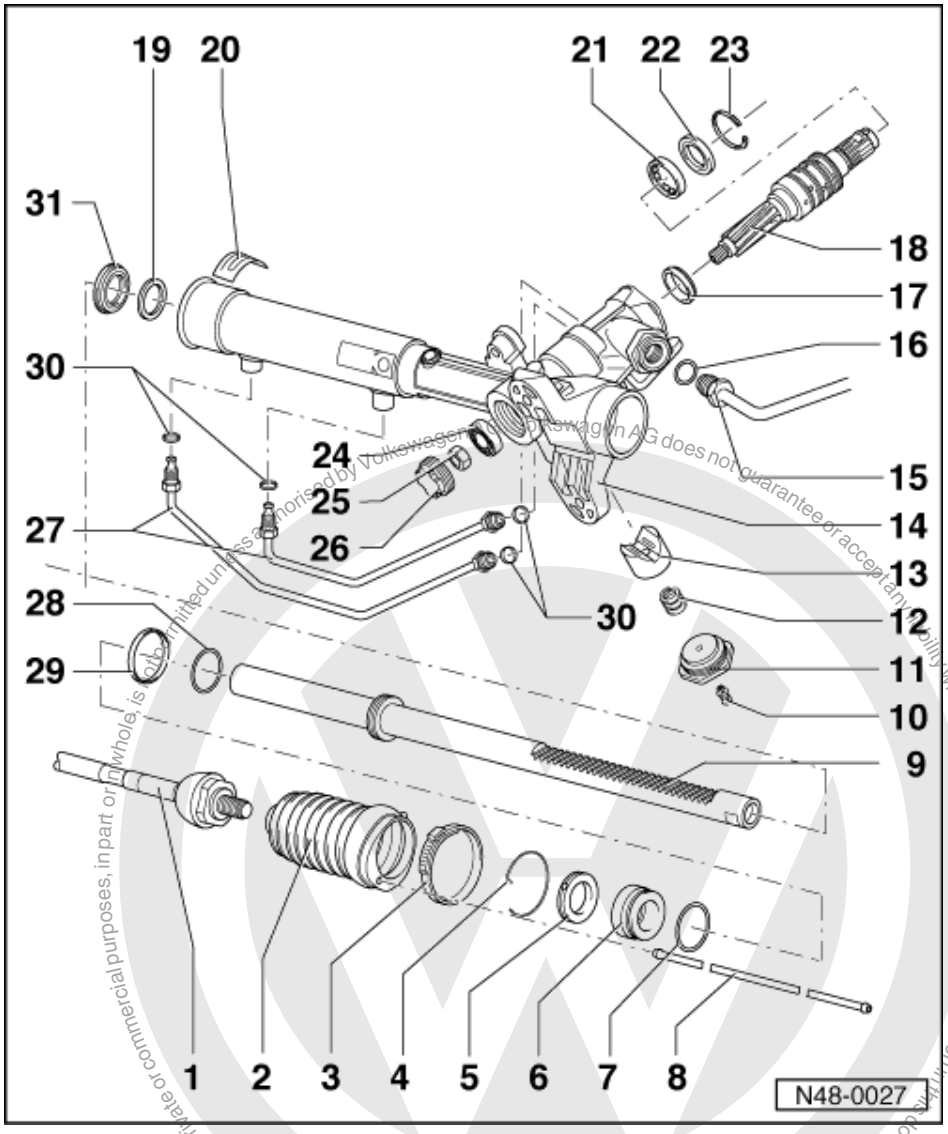

6 Rack guide
- Supplied as an assembly with oil seal in repair kit
- Renew

7 Seal
- Is fitted to the rack guide (item - 6 -) in repair kit

8 Pressure balancing pipe
- Check for damage (dents, kinks)

9 Rack
- Check for scoring => Page 234
- After removing coat immediately with hydraulic oil (protection against corrosion)
- Can be supplied as replacement part, allocation

=> Replacement parts catalogue

Protected by copyright. Copyright by Volkswagen AG.
Volkswagen AG does not guarantee or accept any liability with respect to the correctness of information in this document. Copyright by Volkswagen AG.
Copying for private or commercial purposes, in part or in whole, is not permitted unless authorised by Volkswagen AG.
satelettronica

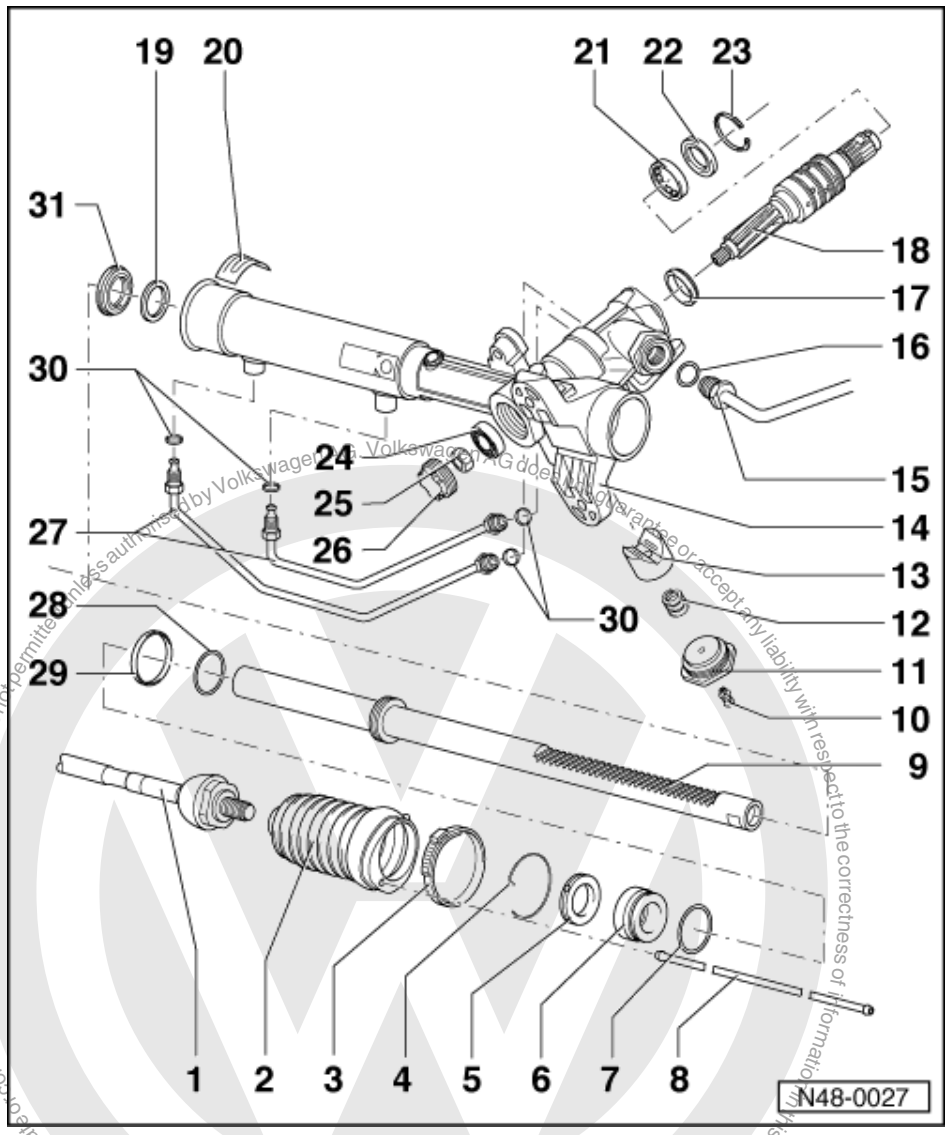

10 Plug
- Is only required when the rack is replaced
- To fit drill hose in the adjusting screw => Page 243
- Is supplied in repair kit

11 Adjusting screw with lock nut, 60 Nm
- Before unscrewing mark position of adjusting screw and lock nut in relation to housing => Page 228
- Adjusting steering box => Page 243

12 Spring

13 Thrust piece
- Removing => Page 229
- Mark installation position

14 Housing
- Check cylinder contact surface for scoring, if necessary renew steering box complete

satelettronica

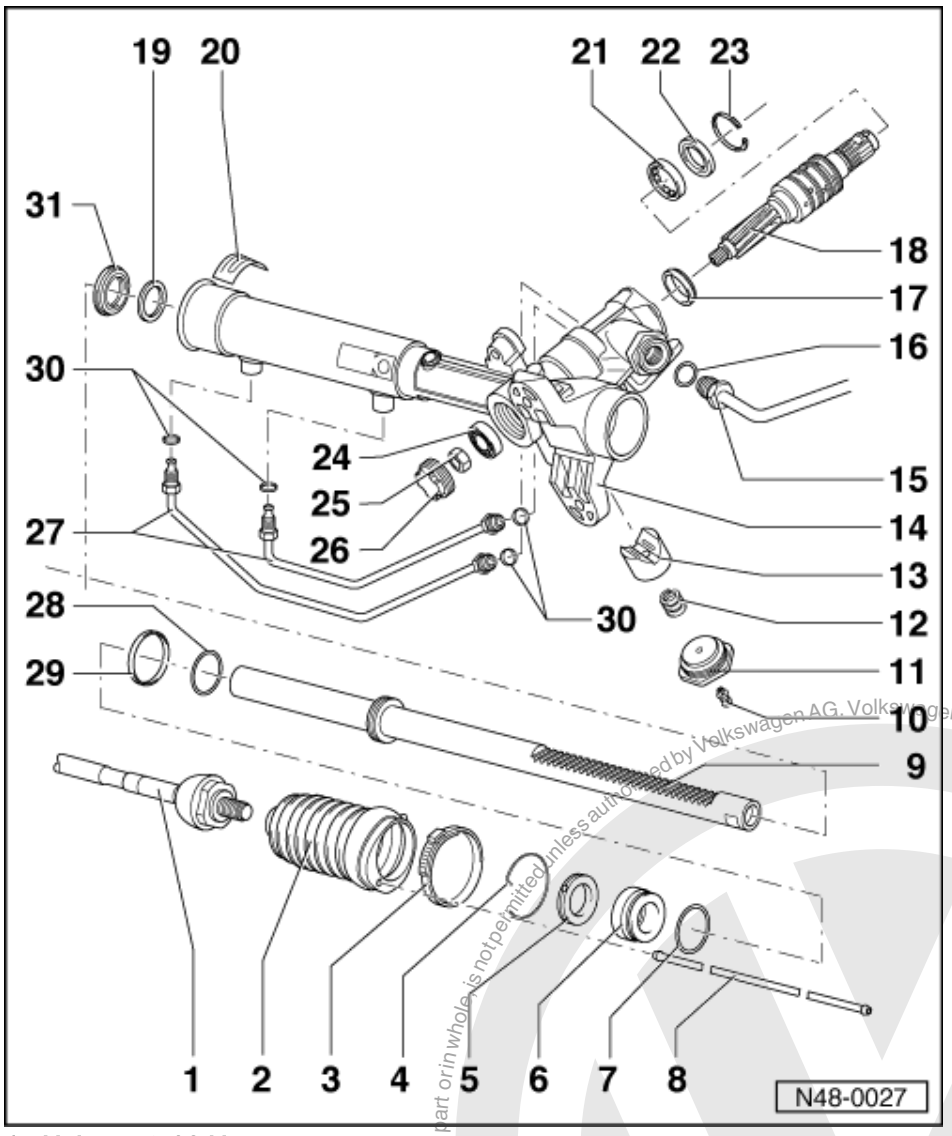

15 Union nut, 30 Nm

16 Seal

- Renew
- Is not included in repair kit

=> Replacement parts catalogue

17 Oil seal

- Removing => Page 230
- Installation position => Page 232
- Installing => Page 232
- Renew

18 Valve body

- Removing => Page 230
- Cannot be repaired
- Is not available as replacement part, if damaged renew steering box

19 Support ring

- If fitted must be refitted

satelettronica
Protected by copyright. Copyright by Volkswagen AG. Volkswagen AG does not guarantee or accept any liability with respect to the correctness of information in this document. Copyright by Volkswagen AG. Copying for private or commercial purposes, in part or in whole, is not permitted unless authorised by Volkswagen AG.

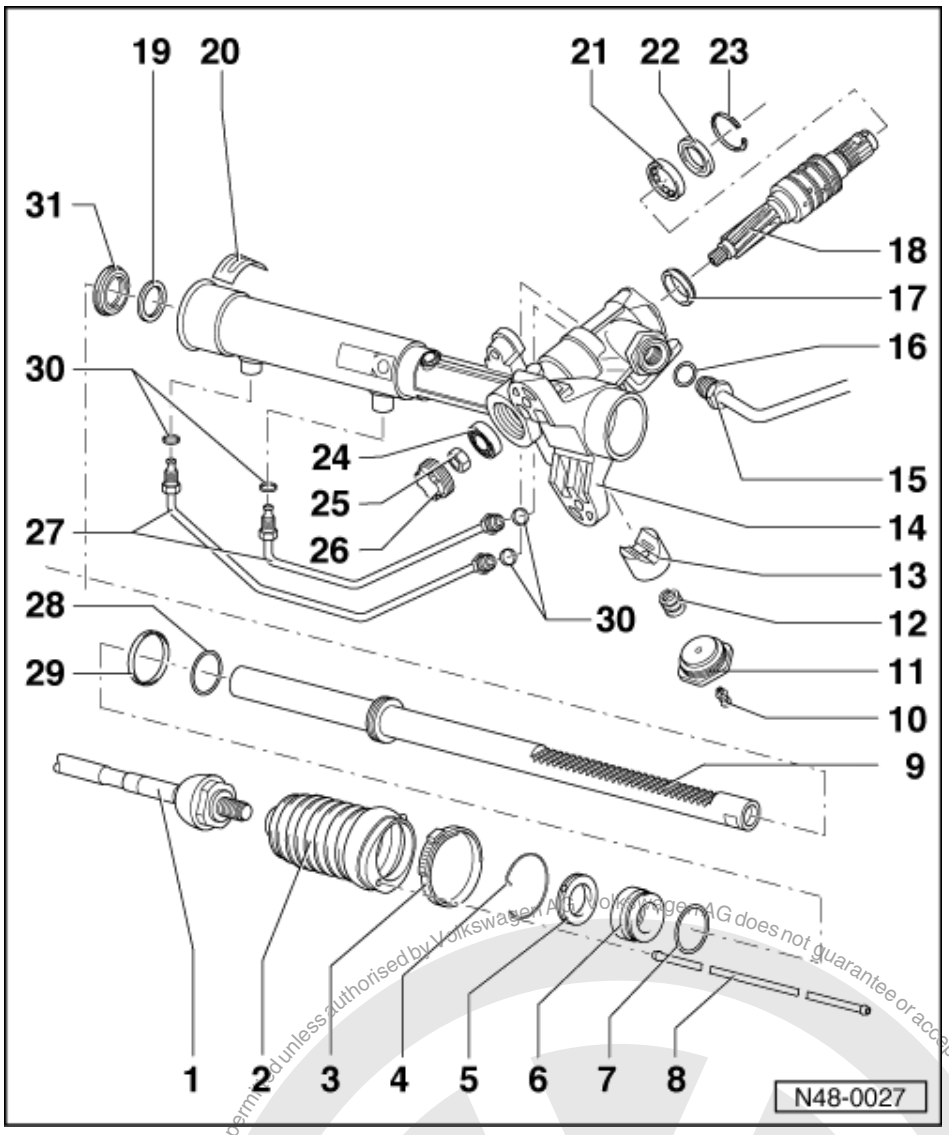

20 Adhesive foil

- Before sticking on thoroughly clean this area of the housing e.g. with thinners, bonding surface must be free of oil and grease
- Renew

21 Roller bearing

- Installation position: Lettering faces upwards

22 Oil seal

- Renew

23 Circlip

24 Ball bearing

- Drive out with VW 439 downwards from top
- Grease with steering box grease AOF 063 000 04
- Installing => Page 236

25 Self-locking hexagon nut, 30 Nm

- Renew

Protected by copyright. Copying for private or commercial purposes, in part or in whole, is not permitted unless authorised by Volkswagen AG. Copyright by Volkswagen AG. Volkswagen AG does not guarantee or accept any liability with respect to the correctness of information in this document.
satelettronica

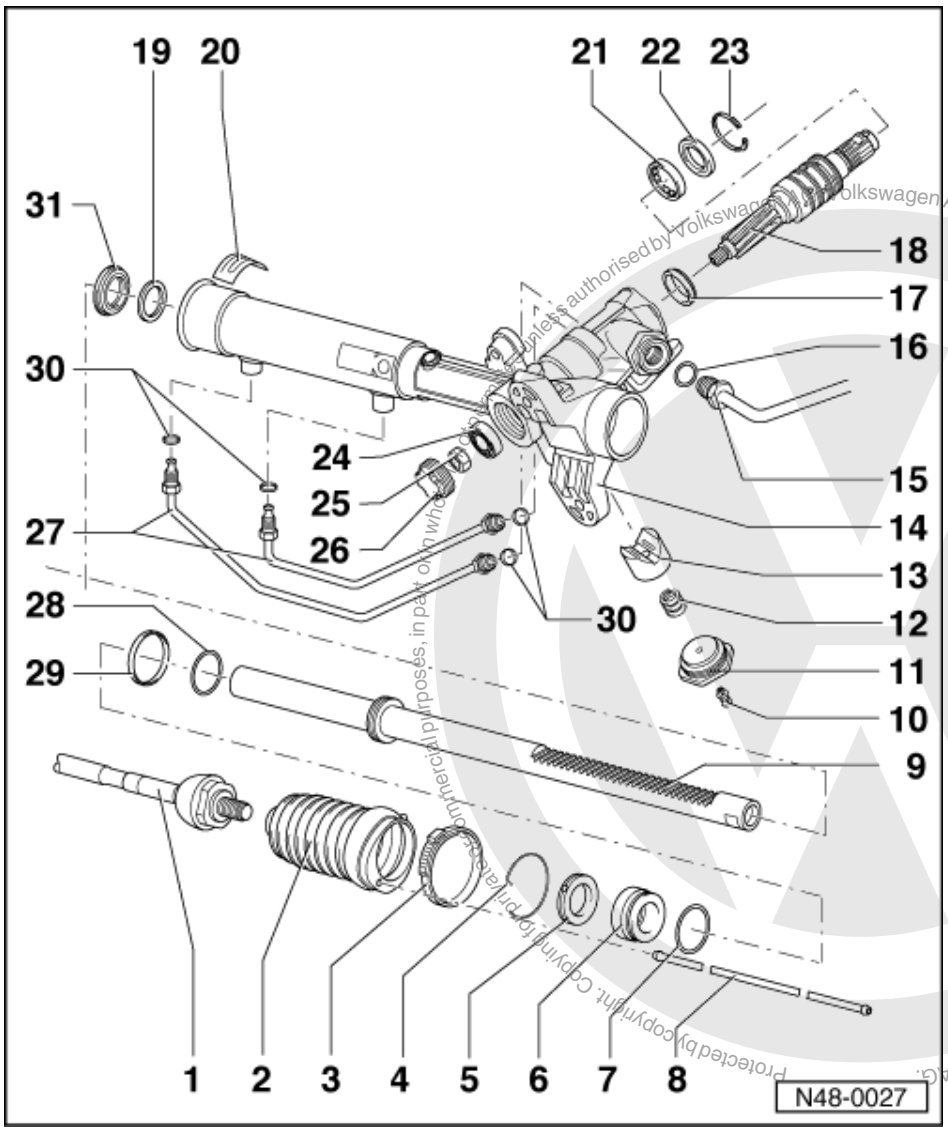

Volkswagen AG does not guarantee or accept any liability with respect to the correctness of information in this document. Copyright by Volkswagen AG.
Protected by copyright. Copying for private or commercial purposes, in part or in whole, is not permitted unless authorised by Volkswagen AG.
satelettronica

26 Plug, 40 Nm

- Removing and Installing =>Page 229
- Renew

27 Pipe

- Do not disconnect
- Is not available as replacement part
- Seal cannot be replaced

28 Seal

- Is already fitted to new racks which are supplied as a replacement part

29 Seal

- If scoring is visible or can be felt, renew => Page 234
- Is already fitted to new racks which are supplied as replacement part

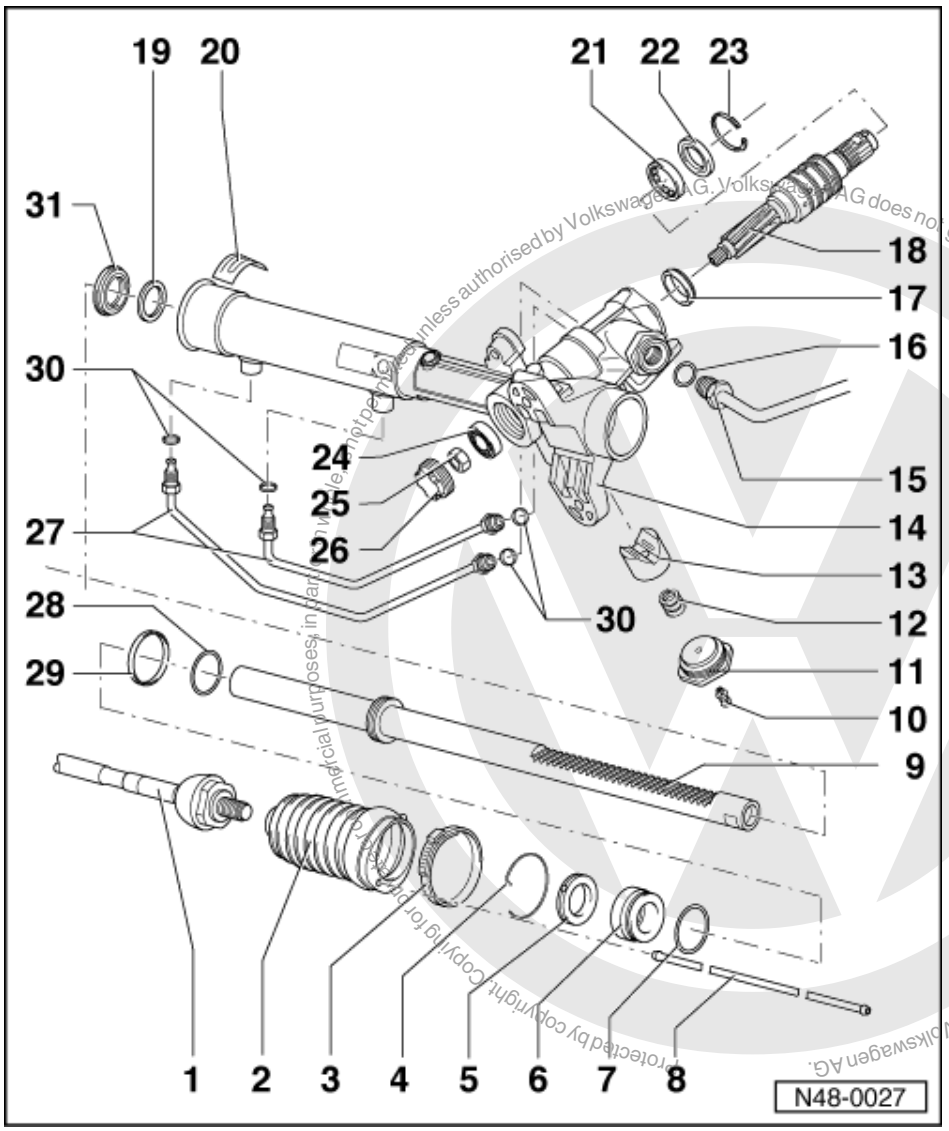

30 Seal

- Is not available as replacement part

31 Oil seal

- Renew
- Removing => Page 231
- Installation position => Page 233
- Installing => Page 233

satelettronica

3.6 - Dismantling and assembling power assisted steering box (TRW)

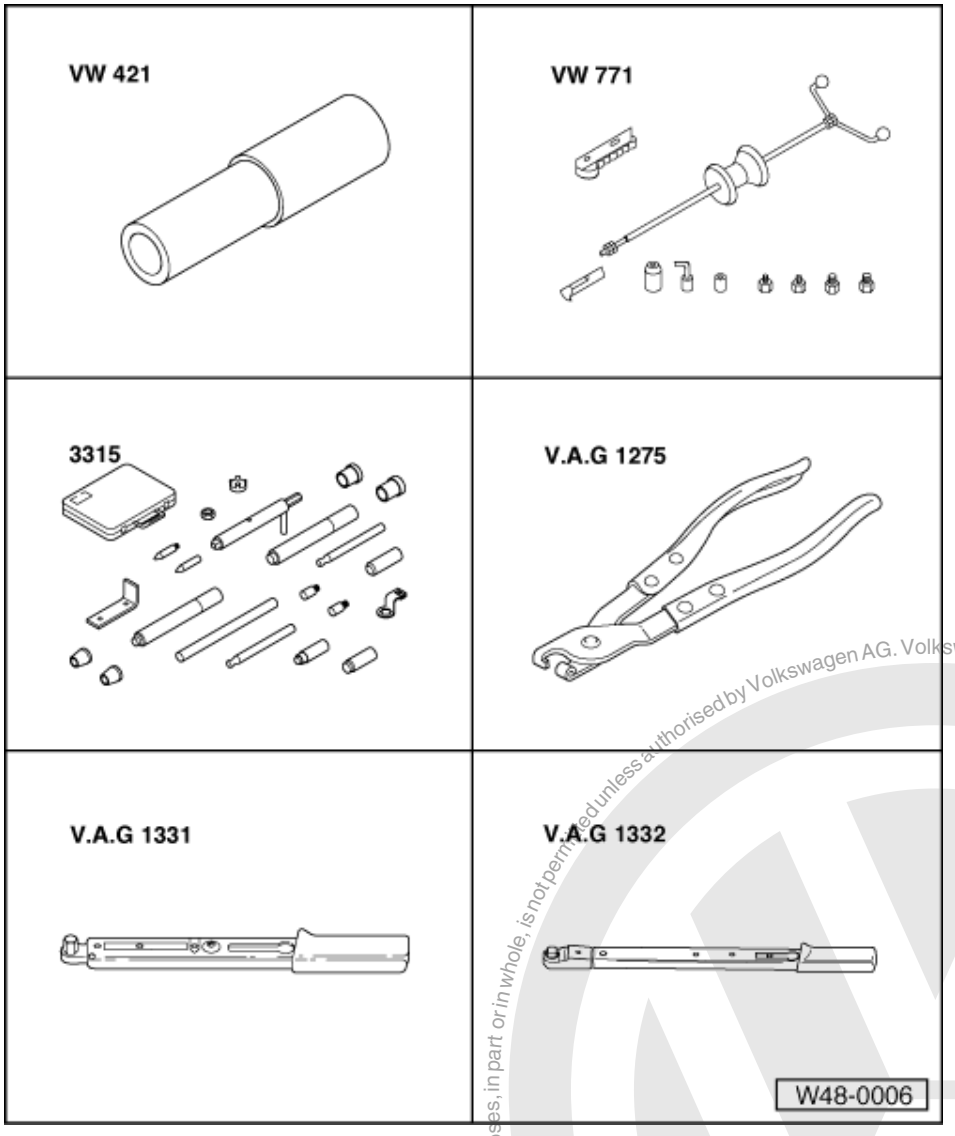

Special tools, testers and auxiliary items required

- VW 421 Tube
- VW 771 Multi-purpose tool
- 3315 Tool set for power assisted steering box
- V.A.G 1275 Hose clamp pliers
- V.A.G 1331 Torque wrench
- V.A.G 1332 Torque wrench

Protected by copyright. Copying for private or commercial purposes, in part or in whole, is not permitted unless authorised by Volkswagen AG. Volkswagen AG does not guarantee or accept any liability with respect to the correctness of information in this document. Copyright by Volkswagen AG.
satelettronica

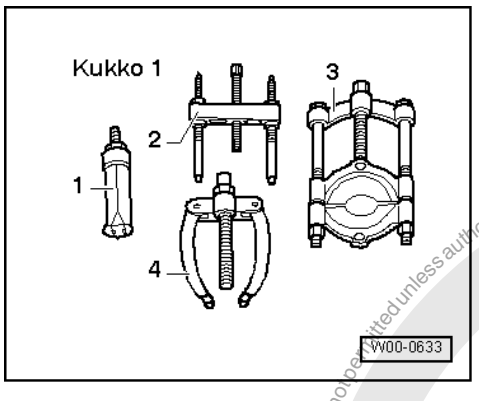

Special tools and workshop equipment required

- 1 - Internal puller Kukko 21/4

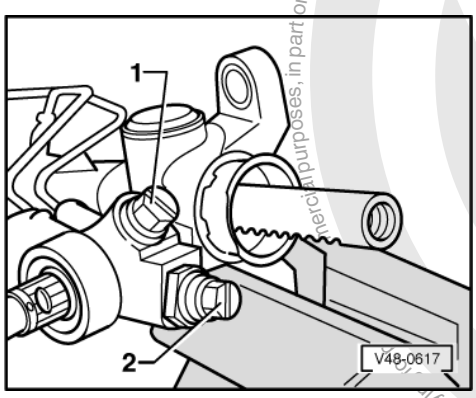

Dismantling

- -> If not already sealed, seal pipe connections on power assisted steering box.

  1 - Plastic plug
  2 - Plastic plug

- Clean exterior of power assisted steering box.
- Open clamp and push back bellows.

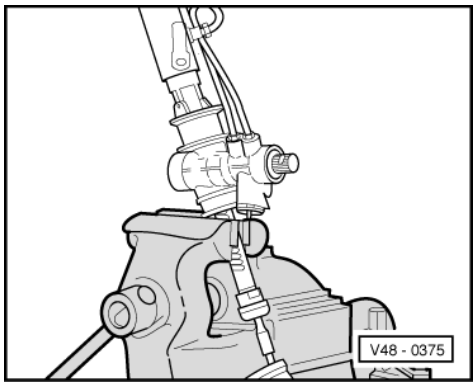

- -> Clamp steering box with rack in a vice and unscrew the track rod.

Note:

Use protective jaws, check protective jaws for impurities e.g. metal filings or similar and thoroughly remove.

- Unscrew track rod.

Protected by copyright. Copyright by Volkswagen AG. Volkswagen AG does not guarantee or accept any liability with respect to the correctness of information in this document. Copyright by Volkswagen AG. Copying for commercial purposes, in part or in whole is not permitted unless authorised by Volkswagen AG.
satelettronica

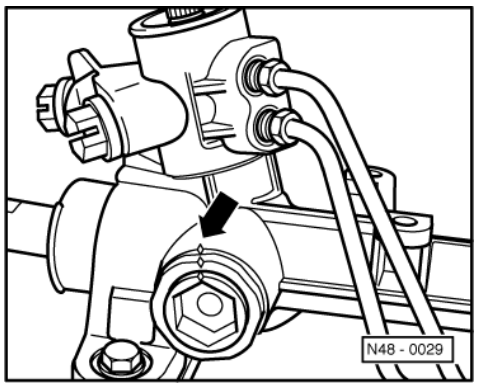

- -> Mark position of adjustment screw and lock nut in relation to housing (arrow).

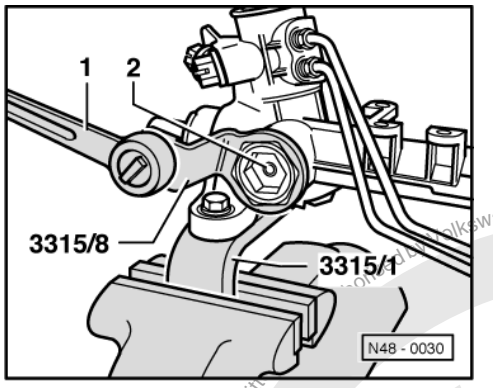

- -> Unscrew lock nut together with adjusting screw.

Notes:

- Do not move position of adjusting screw in relation to lock nut when unscrewing.
- If necessary screw out adjusting screw together with lock nut using tool 3115/6.
- Thrust piece/adjusting screw are lightly spring-loaded.

1 - Ratchet (commercial type)
2 - Adjusting screw

Protected by copyright. Copyright by Volkswagen AG. Volkswagen AG does not guarantee or accept any liability with respect to the correctness of information in this document. Copyright by Volkswagen AG.
satelettronica

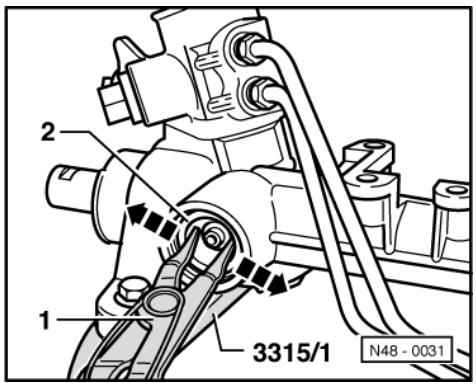

- -> Mark installed position of thrust piece and remove.

1 - Expanding pliers (commercial type)
2 - Thrust piece

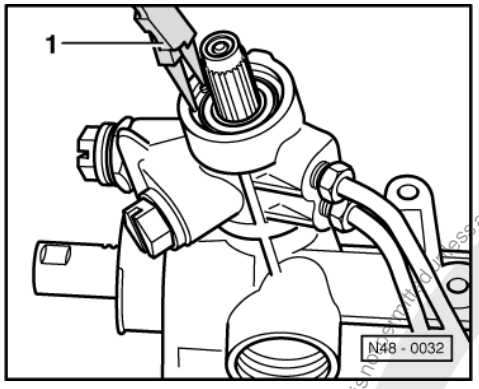

- -> Remove valve body circlip.

1 - Pointed pliers (commercial type)

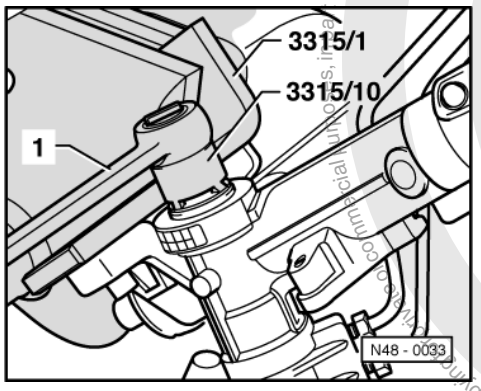

- -> Remove plug from bottom of valve body.

1 - Ratchet (commercial type)

If it is very tight, loosen plug with a hammer and drift.
.

Protected by copyright. Copying for private or commercial purposes, in any form or by any means, is only permitted with the express authorised by Volkswagen AG. Volkswagen AG does not guarantee or accept any liability with respect to the correctness of information in this document. Copyright by Volkswagen AG.
satelettronica

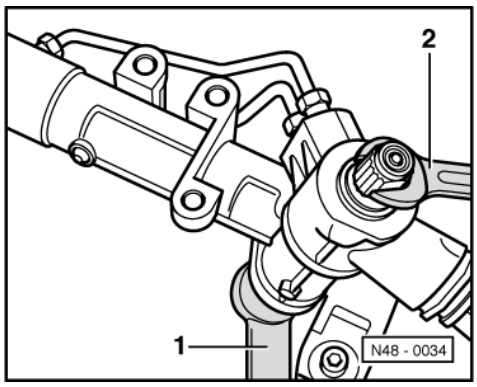

- -> Remove hexagon nut at bottom of valve body.

  1 - Ratchet (commercial type)
  2 - Open jaw spanner (commercial type)

- Knock out valve body upwards from below with drift.
- Remove grease from the valve body splines.
- Pull adhesive foil off the housing.
- Pull rack fully to left.

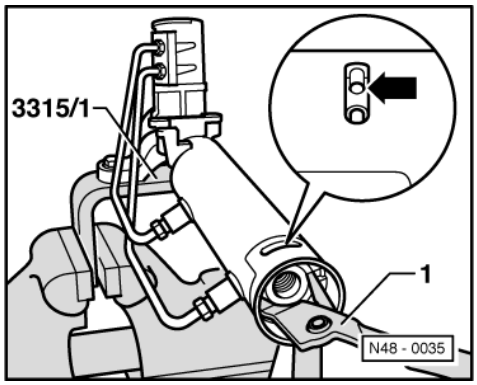

- -> Turn securing ring so that the opening of the circlip (arrow) is positioned in the groove of the housing.
- Turn securing ring further (clockwise or anti-clockwise), so that the circlip is turned out of the housing.
- Pull rack with rack guide out of housing, pull off rack guide and place rack so that it and the piston seal is not damaged.

  1 - Pointed pliers (commercial type)

Removing valve body oil seal

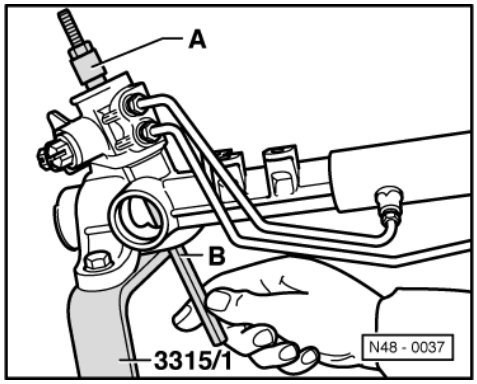

- -> Drive oil seal out upwards.

  A - Internal puller e.g. Kukko 21/4

Protected by copyright. Copying for private or commercial purposes, in part or in whole is not permitted unless authorised by Volkswagen AG. Volkswagen AG does not guarantee or accept any liability with respect to the correctness of information in this document. Copyright by Volkswagen AG.
satelettronica

B - Drift

When inserting the puller -A- ensure that the claws (arrow in illustration Page 231) locate properly under the oil seal. The puller must not be spread too far, otherwise the oil seal seating in the housing will be damaged or the oil seal can jam in the housing.

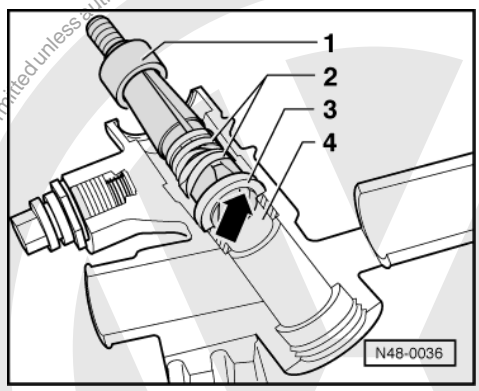

-> To ease fitting the puller it is recommended that a rubber band is placed around the claws. For ease of illustration figure shows the housing sectionalised.

1 - Internal puller e.g. Kukko 21/4
2 - Rubber band
3 - Oil seal
4 - Sleeve bearing
do not remove

Pulling out inner rack oil seal

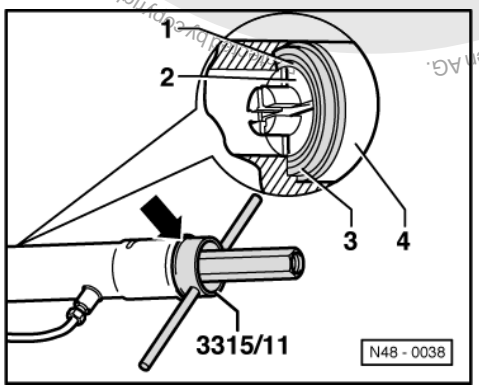

- -> Insert oil seal puller until the mark on the tool (arrow) aligns with the edge of the housing. (Only then will the claws locate behind the support ring).
- Spread tool claws -2- firmly by turning the spindle.

Note:

When inserting the tool ensure that the cylinder bearing surface is not damaged.

1 - Support ring
2 - Claws
3 - Oil seal
4 - Tools 3315/11

satelettronica

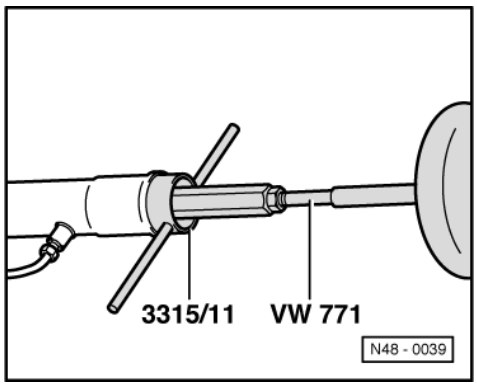

- -> Screw tool VW 771 into the puller.
- Pull out oil seal.

Assembling

Before assembling the housing must be checked for impurities (paint residue, metal particles, dirt) and thoroughly cleaned if necessary.

Notes:

- Ensure meticulous cleanliness is observed when assembling!
- Check cylinder bearing surface for scoring or other damage. If scoring can be felt the steering box must be replaced complete.
- Check the rack for scoring => Page .
- Coat oil seals with hydraulic oil before installing.

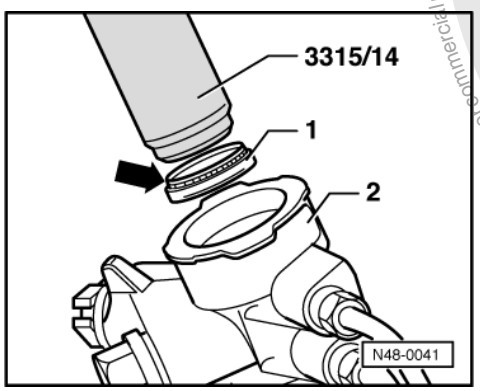

- Check that the inside of the valve body housing -2- is scrupulously clean.
- -> Knock valve body oil seal in onto stop.

1 - Oil seal

The sealing lip (arrow) faces upwards to tool. Installation position of oil seal in valve body housing => Fig. N48-0040 page 233 .

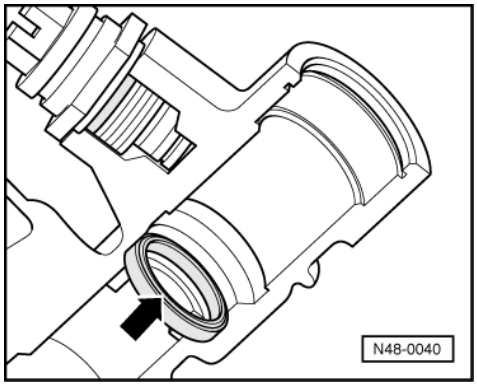

Protected by copyright. Copying for private or commercial purposes, in part or in whole is not permitted unless authorised by Volkswagen AG. Volkswagen AG does not guarantee or accept any liability with respect to the correctness of information in this document. Copyright by Volkswagen AG.
satelettronica

Installation position for valve body oil seal

- -> The sealing lip of the oil seal (arrow) faces upwards.

For ease of illustration Fig. shows valve turret sectionalised.

Installing rack inner oil seal

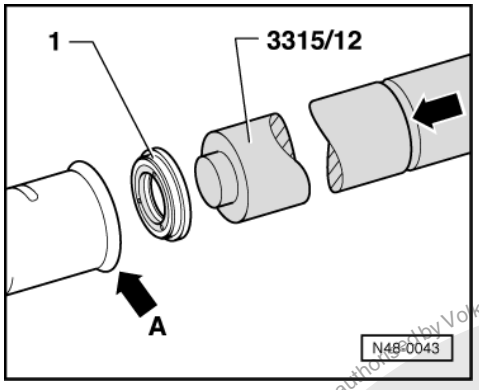

- Place oil seal -1- on tool.
- Coat oil seal -1- with hydraulic oil.
- -> Drive oil seal -1- into the cylinder tube until the groove (arrow) on the tool aligns with the edge of the housing (arrow A).

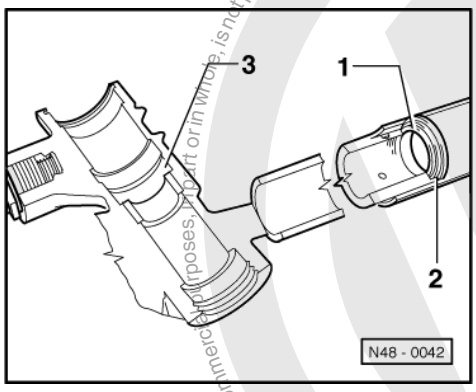

-> Installation position for rack oil seal

The oil seal support ring faces to valve body housing

1 - Support ring
2 - Oil seal
3 - Valve body housing

For ease of illustration the illustration shows the housing sectionalised.

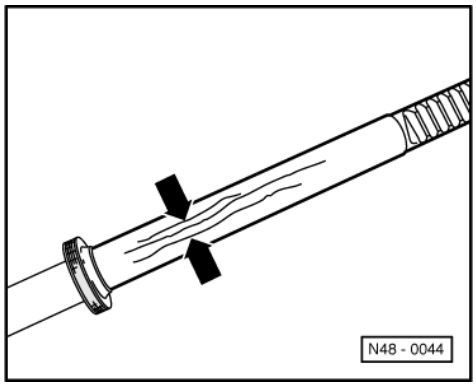

Copyright by Volkswagen AG. Volkswagen AG does not guarantee or accept any liability with respect to the correctness of information in this document. Copyright by Volkswagen AG. Copying for private or commercial purposes, in part or in whole, is not permitted unless authorised by Volkswagen AG.
satelettronica

-> Checking rackfor scoring

The rack must be replaced if it has corroded areas or visible deep scoring.

With this visual check it is not possible to assess whether the rack has been damaged by force e.g. caused by an accident.

If light scoring (arrows) is visible/perceptible on the rack, which are only so deep that they can be rubbed-out with abrasive paper (grade 350...600), the rack can be reused.

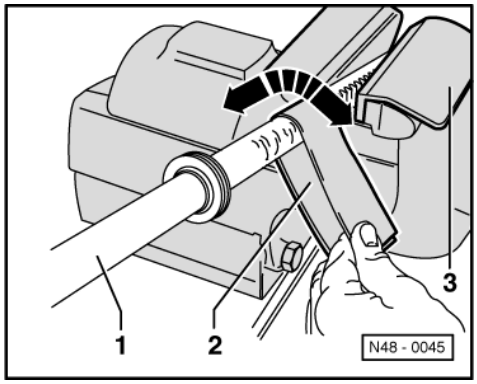

- -> Rub down rack with abrasive paper in a radial direction. (This is only possible with light scoring).

  Check chamfer on face side of rack for damage, if necessary eliminate with a fine whetstone and/or abrasive paper.

  1 - Rack
  2 - Abrasive paper (grade 350...600)
  3 - Protective jaws

If the old rack is to be used again, check the seal for scoring (visual check). If scoring is visible or perceptible the seal and O-ring underneath must be replaced.

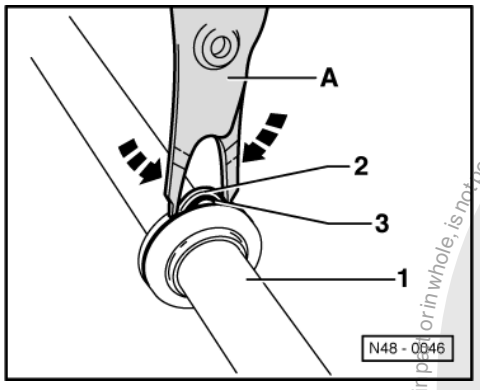

- -> Lightly press seal together with pliers.
- Lever out seal and O-ring.

  A - Pointed pliers (commercial type)
  1 - Rack with piston
  2 - O-ring
  3 - Seal

Protected by copyright. Copying for private or commercial purposes, in part or in whole, is not permitted unless authorised by Volkswagen AG. Volkswagen AG does not guarantee or accept any liability with respect to the correctness of information in this document. Copyright by Volkswagen AG.
satelettronica

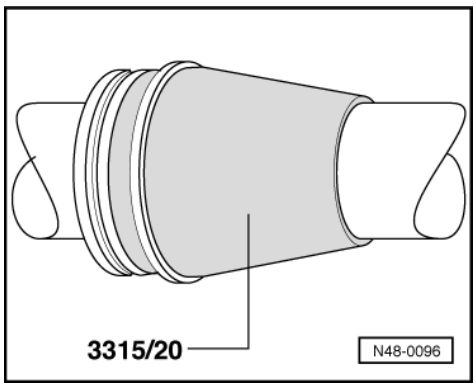

Fitting the seal to the rack piston

- Push fitting sleeve onto rack.
- Pull O-ring over the tool and insert in the piston groove.
- -> Coat seal with hydraulic oil, pull over the tool and insert in the piston groove.

Fitting the rack

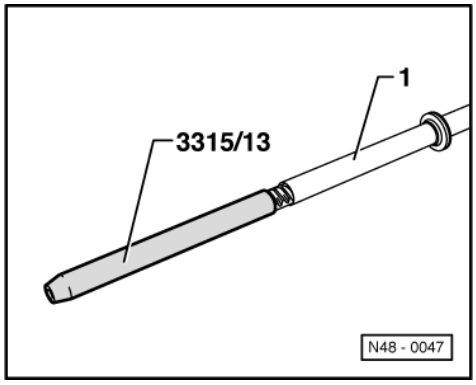

- Clean and oil rack (remove old grease from teeth)
- Apply AOF 063 000 04 grease to rack teeth.
- -> Push protective tube over rack onto stop.
- Completely wipe off excess grease.

No grease must be allowed to get into the oil circuit!

- Coat rack piston and protective tube with hydraulic oil.
- Place guide sleeve 3315/22 in the housing.

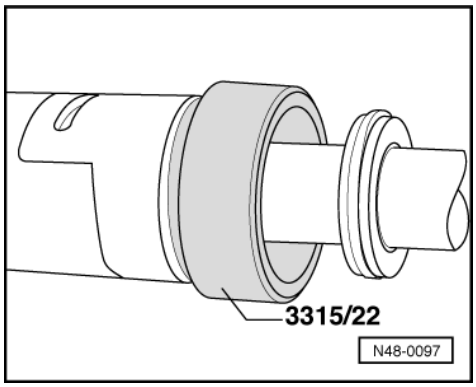

- -> Slide rack into the housing.

When sliding in ensure that the seal is pressed into the groove in the piston without jamming.

- Guide rack slowly into the housing.
- Pull protective tube 3315/13 off rack.

Protected by copyright. Copying for private or commercial purposes, in part or in whole, is not permitted unless authorised by Volkswagen AG. Volkswagen AG does not guarantee or accept any liability with respect to the correctness of information in this document. Copyright by Volkswagen AG.
satelittonica

- Align rack teeth so that they face to pinion teeth.
- Pull off guide sleeve 3315/22.

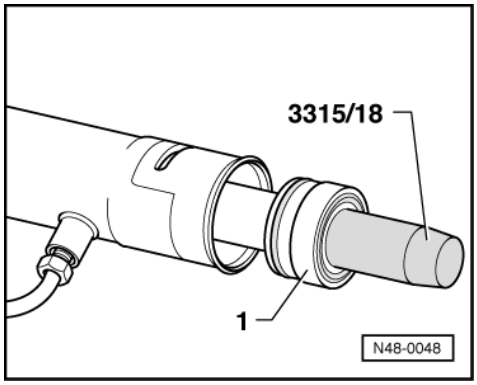

- -> Screw fitting sleeve 3315/18 onto rack and coat with hydraulic oil.
- Carefully slide rack guide -1- over the rack into the housing onto the stop.
- Push rack fully into the housing if this has not already been done.

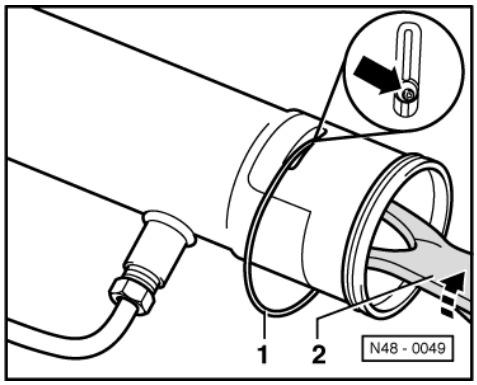

- Place securing ring in housing and push in until the groove in the securing ring is visible in the elongated hole in the housing.
- -> Place circlip in the hole in the securing ring (arrow).
- Pull securing wire in by turning the securing ring. (After pulling in turn securing ring approx. 1/2 turn further).

1 - Securing wire
is not formed into a ring in repair kit, but supplied as a straight piece of wire.
2 - Pliers (commercial type)

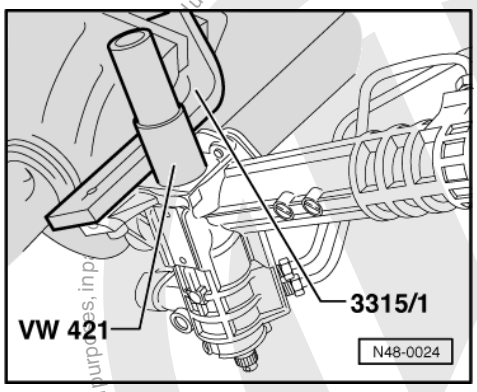

- -> Carefully drive-in lower valve body ball bearing onto stop.

satelettronica
Protected by copyright. Copying for private or commercial purposes, in part or in whole, is not permitted unless authorised by Volkswagen AG. Volkswagen AG does not guarantee or accept any liability with respect to the correctness of information in this document. Copyright by Volkswagen AG.

Ball bearing must not be canted when driving in

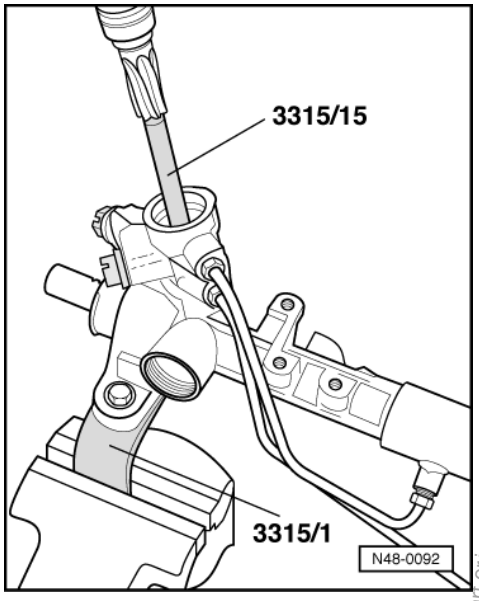

- Screw fitting tool 3315/15 onto valve body.
- -> Lubricate valve body with hydraulic oil and carefully insert by hand into valve body housing. (Note position of rack).

Ensure that the seal in housing is not damaged by the rack teeth!

- Install valve body upper roller bearing. (Lettering on roller bearing faces upwards).

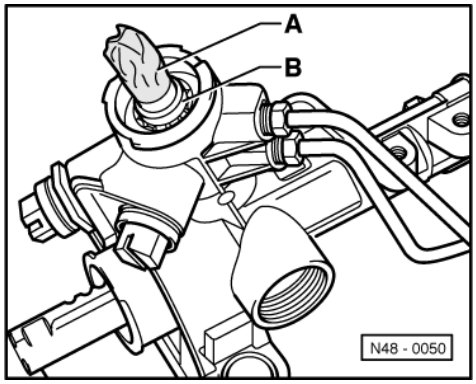

- Cover valve body teeth with sticky tape to protect the seal. Prevent folds.

-> A - Sticky tape
B - Valve body

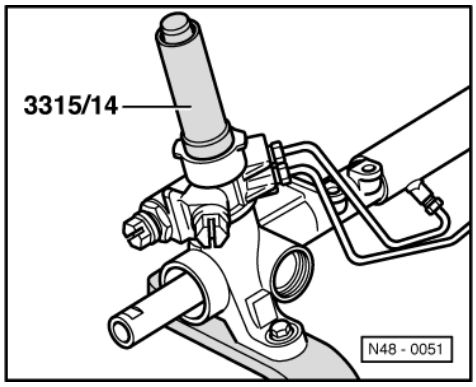

Protected by copyright. Copying for private or commercial purposes, in part or in whole, is not permitted unless authorised by Volkswagen AG. Volkswagen AG does not guarantee or accept any liability with respect to the correctness of information in this document. Copyright by Volkswagen AG.
satelettronica

- -> Drive seal in until the groove for the circlip is visible in housing.
- Insert circlip.
- Remove sticky tape/sellotape.
- Remove fitting tool 3315/15.
- Fit hexagon nut for valve body and tighten (30 Nm, counterhold with 14 mm AF open jaw spanner).
- Screw cover on (40 Nm).
- Grease thrust piece with grease AOF 063 000 04.
- Insert thrust piece and spring in housing.

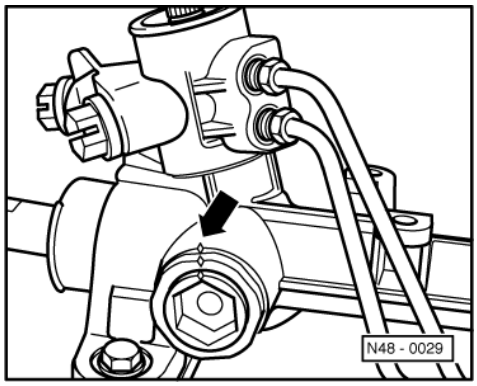

- -> Fit lock nut together with adjustment screw.

Notes:

- The adjustment nut and lock nut markings (arrow) must align after tightening. If a new rack has been used => Page 243 adjusting power assisted steering box with new rack.
- Adjusting steering box when installed => Page 241 .

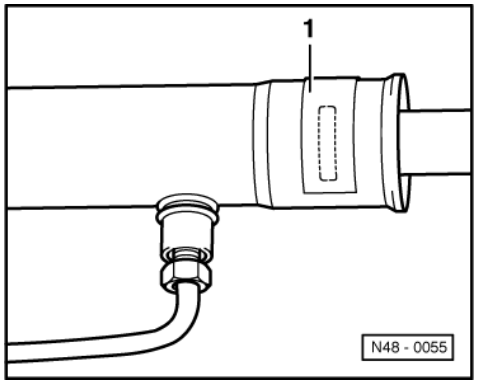

- Clean bonding surface in area of elongated hole with thinners (e.g. Nitro thinners L 160 or methylated spirit).
- Fill elongated hole with sealant AKL 450 005 05.
- -> Seal elongated hole with adhesive foil -1-.

Installing track rods

- If necessary adjust new track rod to length =>Page 245 .

Installing track rod without locking fluid D6.

- Screw on track rod and tighten to 70 Nm.

Installing track rods with locking fluid D6

If parts are reused, it is essential to clean any residuals of locking fluid off the threaded studs of the inner joint or the thread tapped hole as described below. Otherwise there is a danger of the thread being damaged when being reinstalled or removed.

Copyright by Volkswagen. Copying for private or commercial purposes, in part or in whole, is not permitted unless authorised by Volkswagen AG. Volkswagen AG does not guarantee or accept any liability with respect to the correctness of information in this document.
satelettronica

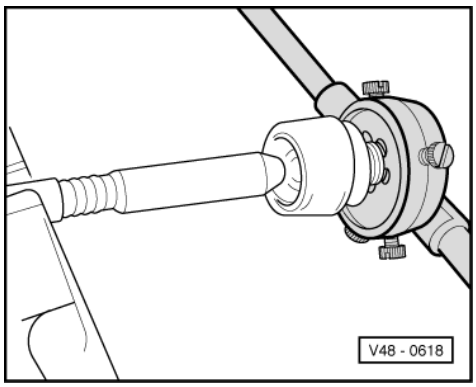

- -> Clean track rod threaded stud with M 14 x 1.5 die or wire brush.
- Check if joint stud threads are deformed renew if necessary.

Note:

Do not cant tap when positioning. If it is difficult to turn the tap onto the thread or if metal swarf forms, this indicates the thread is deformed.

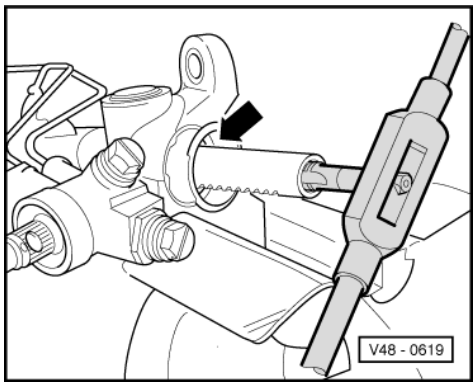

- -> Cover steering box housing opening (arrow) with a cloth.
- Clean threaded hole in rack with M 14 x 1.5 tap.
- Clean thread with nitro thinners e.g. L 160 (thread must be oil and grease free).
- Clean with compressed air.

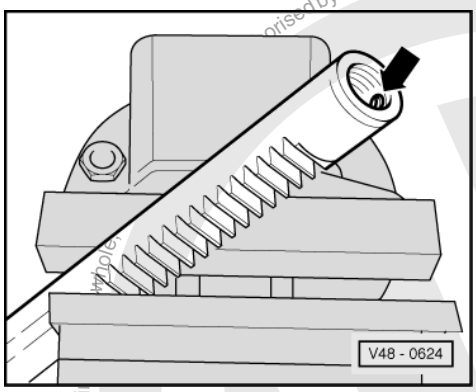

- -> Coat tapped hole thread with D6 locking fluid (arrow).

Note:

Apply one drop only in 2nd thread of rack. If too much D6 is used the release torque when next dismantling will be too high. No D6 must get onto steering rack.

- Tighten track rod to the specified torque - 70 Nm.
  Always use a torque wrench.

satelettronica
Protected by copyright. Copying for private or commercial purposes, in whole or in part, is not permitted unless authorised by Volkswagen AG. Volkswagen AG does not guarantee or accept any liability with respect to the correctness of information in this document. Copyright by Volkswagen AG.

Installing bellows

- Check bellows for wear such as cuts, cracks and check bellows sealing surface for cleanliness.

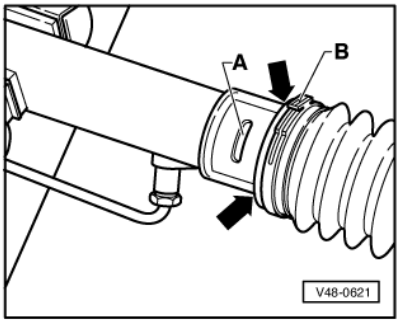

- Install bellows but first turn track rod so that the ball joint pin is in the correct installation position.
- Install pressure balancing pipe.

Notes:

- -> Do not damage adhesive foil -A- when pushing the bellows on.
- Ensure that the bellows and the pressure balancing pipe are correctly installed => bellows installation position.

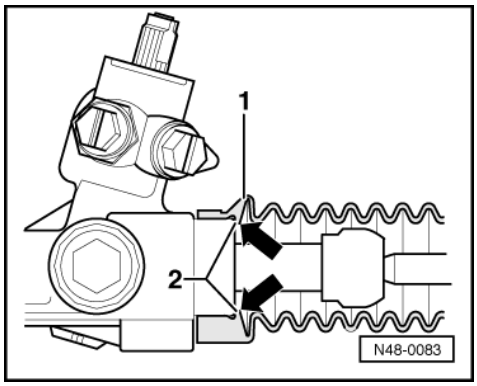

-> Bellows installation position

1 - Bellows
2 - Housing

When installing the bellows ensure that the lip (arrows) lies against the housing

Protected by copyright. Copying for private or commercial purposes, in part or in whole, is not permitted unless authorised by Volkswagen AG. Volkswagen AG does not guarantee or accept any liability with respect to the correctness of information in this document. Copyright by Volkswagen AG.
satelettronica

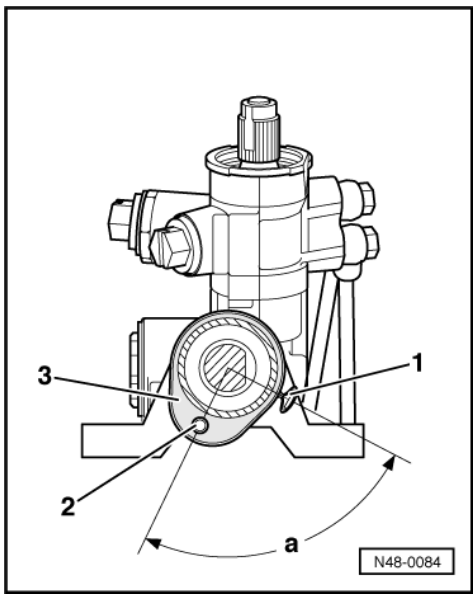

-> Clamp installation position

1 - Clamp
2 - Pressure balancing pipe
3 - Bellows
a - approx. 90°

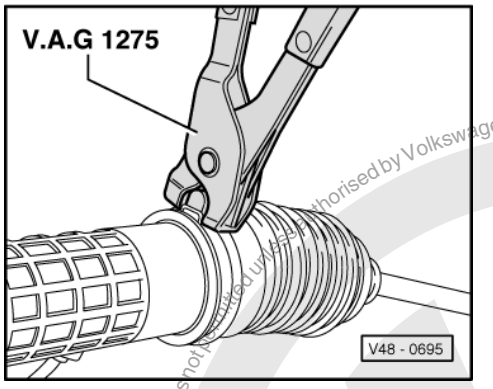

- -> Tension clamp-type clips with pliers V.A.G 1275.

3.7 - Adjusting power steering box when installed

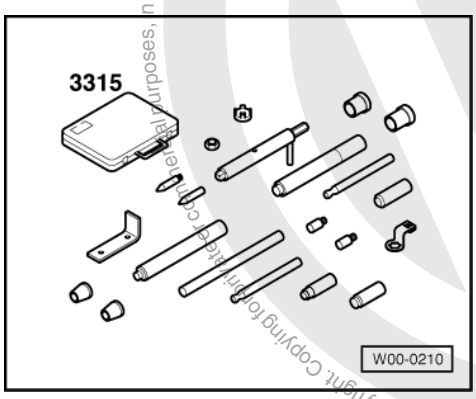

satelettronica
Protected by copyright. Copying for private or commercial purposes, in part or in whole is not permitted unless authorised by Volkswagen AG. Volkswagen AG does not guarantee or accept any liability with respect to the correctness of information in this document. Copyright by Volkswagen AG.

Special tools and workshop equipment required

- 3315 Tool set for power assisted steering box

Notes:

- The adjustment is only required when the steering play is not correct.

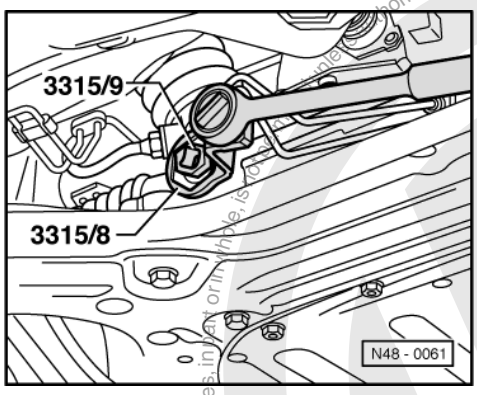

- Two Mechanics are required when adjusting. Adjust with engine switched off.
- The work sequence is identical on left and right-hand drive vehicles.

-> Adjusting steering box on left-hand drive vehicles

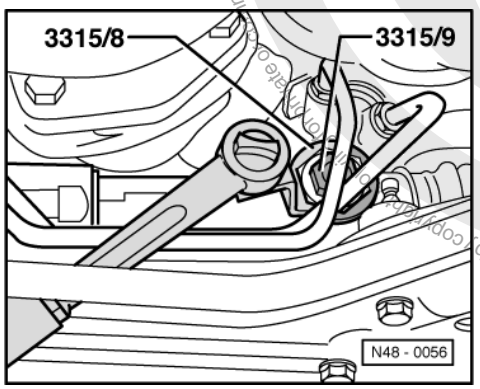

-> Adjusting steering box on right-hand drive vehicles

- Raise vehicle on hoist.
- Wheels in straight-ahead position.

By turning the steering wheel to and fro (about 30°to centre axis) a knocking noise will be heard if there is excessive play.

- Loosen locking nut to do this counter-hold with 3315/9.
- Carefully screw the adjustment screw in until the knocking noise can no longer be heard inside the vehicle.
- Tighten locking nut.
- Complete a road test ensuring that when manoeuvring or negotiating corners the steering self-centres without sticking.

Protected by copyright. Copyright by Volkswagen AG. Volkswagen AG does not guarantee or accept any liability with respect to the correctness of information in this document.
satelettronica

3.8 - Adjusting power steering box (with new rack)

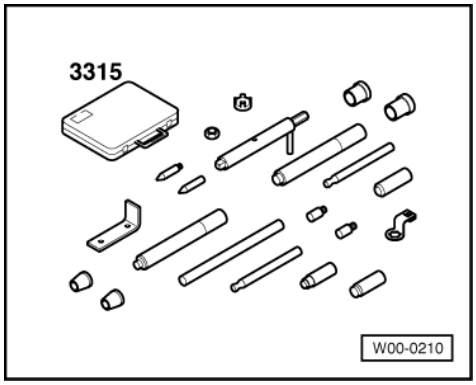

Special tools and workshop equipment required

- 3315 Tool set for power assisted steering box

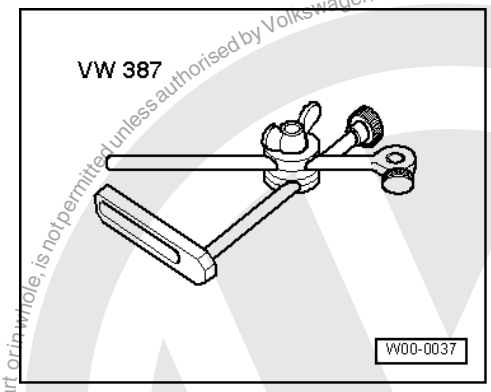

- VW 387 Universal dial gauge bracket
- Dial gauge

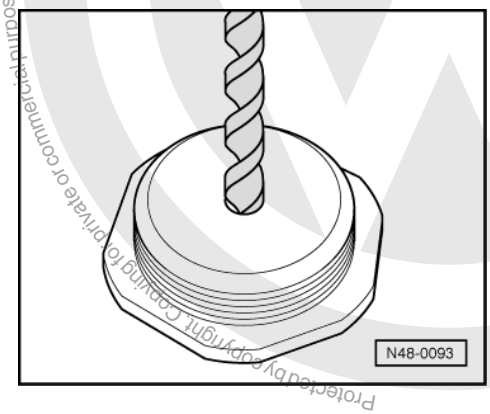

Protected by copyright. Copying for private or commercial purposes, in part or in whole, is not permitted unless authorised by Volkswagen AG. Volkswagen AG does not guarantee or accept any liability with respect to the correctness of information in this document. Copyright by Volkswagen AG.

If a new rack has been used then the steering play is to be adjusted as described in the following.

- -> Drill a 5.1 mm ø hole in the centre of the adjustment screw (centralize on reverse side).
- Thoroughly clean adjustment bolt.
- Centralize rack (measure left and right-hand rack overhang).
- Fit thrust piece and spring in housing, if not already fitted.

satelettronica

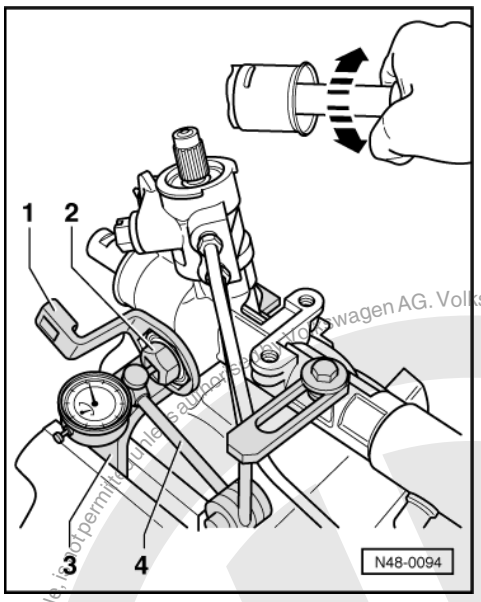

- Screw adjustment screw and lock nut into the housing until the markings are covered.
- -> Fit dial gauge and "0" with approx. 1 mm preload. (Ensure that the dial gauge feeler does not stick and that its face is not damaged/deformed).

  1 - 3315/8
  2 - 3315/9
  3 - 3315/1
  4 - VW 387

- Screw right-hand track rod onto rack and tighten hand tight.

- Turn rack radially from stop to stop thereby noting dial gauge indicator deflection.

  Indicator deflection max. 0.10 mm.

If the needle deflection is more than 0.10 mm, screw thrust piece very slightly into housing.

If needle deflection is less than 0.10 mm, screw thrust piece very slightly out of housing.

- Tighten lock nut.
- Check needle deflection again and if necessary repeat adjustment.
- Remove dial gauge.

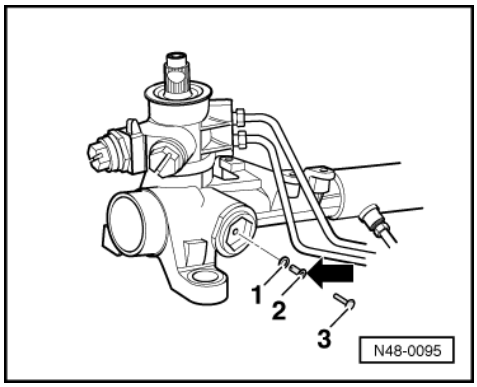

-> Seal hole in adjustment bolt with plug from repair kit.

- First insert clip -2- with seal -1- into hole.
- Place one drop of sealant part No.
  AMV 188 001 02 in clip hole (arrow) and press plug -3- into clip.

satelettronica

- Install track rods => Page 238 .

3.9 - Checking left-hand track rod length and if necessary adjusting

The track rods can only be removed/installed with the steering box removed => Page 203 .

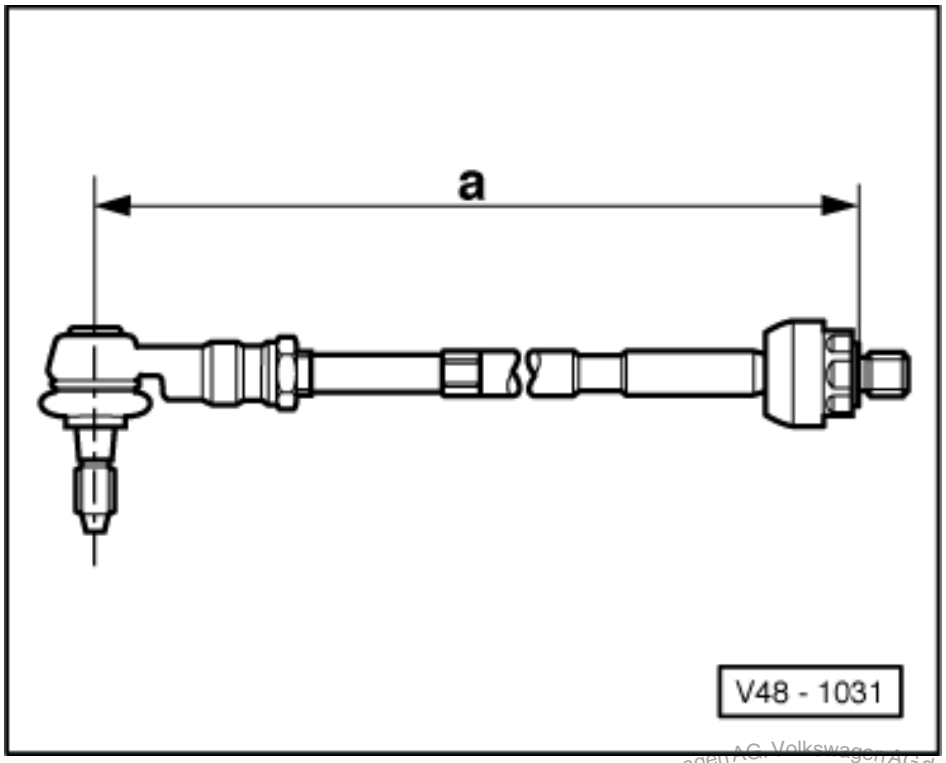

- -> Check dimension "a" on left-hand track rod and if necessary adjust.

Dimension "a" = 377 ± 1 mm
- Screw on track rod and lock.

◆ Before installing new left-hand track rod check dimension "a" and if necessary adjust.

4 - Assembly overview: vane pump, reservoir and hydraulic pipes > 09.99

4.1 - Assembly overview: vane pump, reservoir and hydraulic pipes > 09.99

Special tools and workshop equipment required

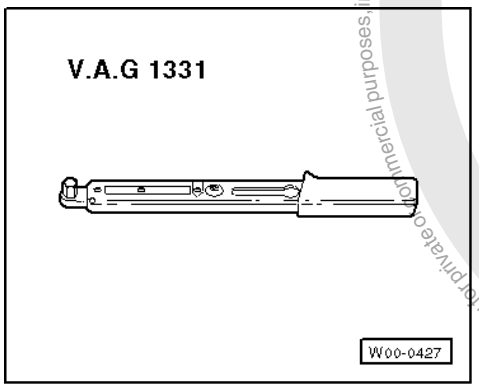

satelettronica
Protected by copyright. Copying for private or commercial purposes, in part or in whole, is not permitted unless authorised by Volkswagen AG. Volkswagen AG does not guarantee or accept any liability with respect to the correctness of information in this document. Copyright by Volkswagen AG.

- V.A.G 1331 Torque wrench

It is not intended that repair work be carried out on the vane pump. If complaints are received determine cause with the help of pressure test, leakage test and Fault Finding Running gear No. 10. If a fault exists renew vane pump.

Notes:

- Pumps supplied as spare parts are not filled with oil. Therefore it is essential to fill the pump with G 002 000 hydraulic oil and to rotate it by hand, otherwise the pump may be damaged or noisy during operation.
- Type of oil: hydraulic oil G 002 000
- Oil system capacity: 0.7 ... 0.9 ltr.

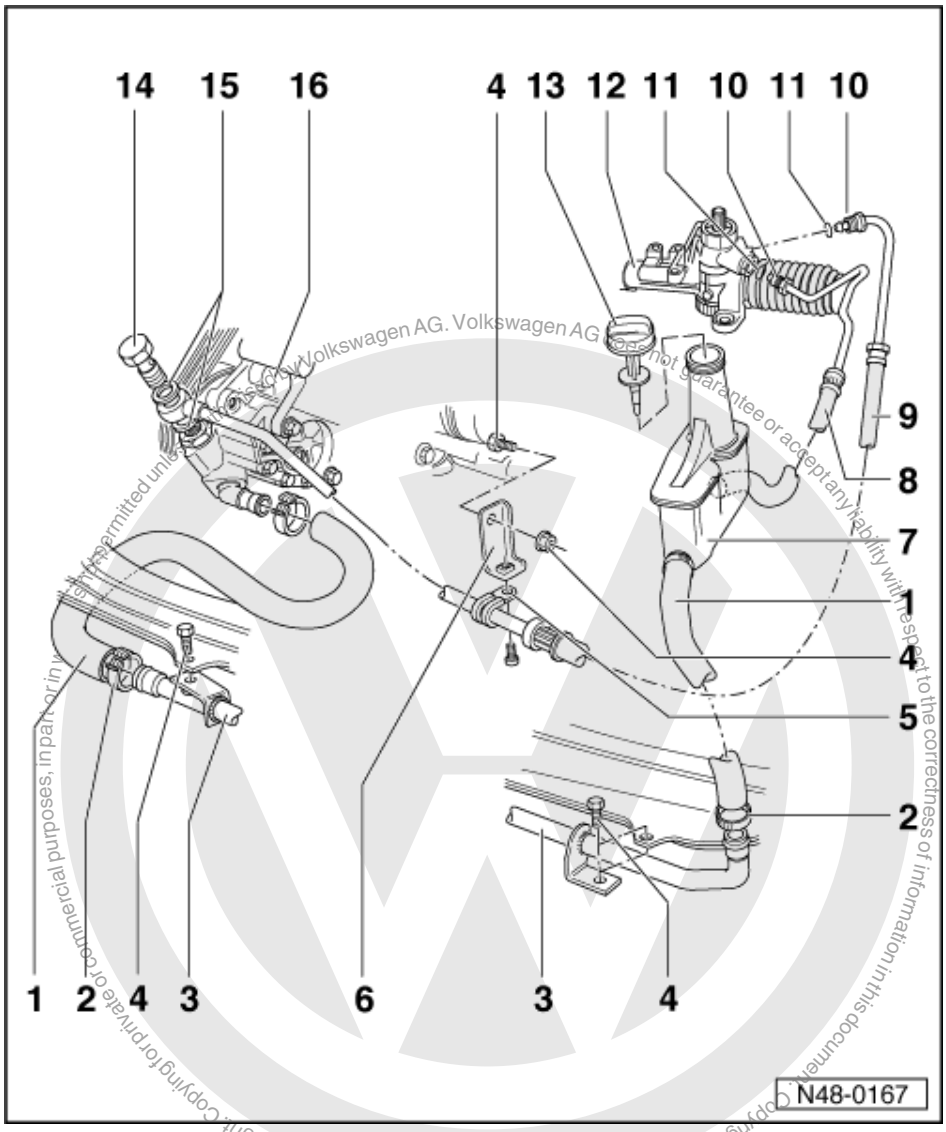

1 Suction hose
2 Hose clamp
3 Cooling pipe
4 Hexagon bolt, 10 Nm
5 Pipe clamp
6 Bracket
- Various versions according to engine/gearbox

=> Replacement parts catalogue

Protected by copyright. Copying for private or commercial purposes, in part or in whole, is not permitted unless authorised by Volkswagen AG. Volkswagen AG does not guarantee or accept any liability with respect to the correctness of information in this document. Copyright by Volkswagen AG.

satelettronica

7 Reservoir
8 Return hose
9 Pressure hose
- Tighten to 30 Nm

10 Union nut, 30 Nm
11 Seal
- Renew

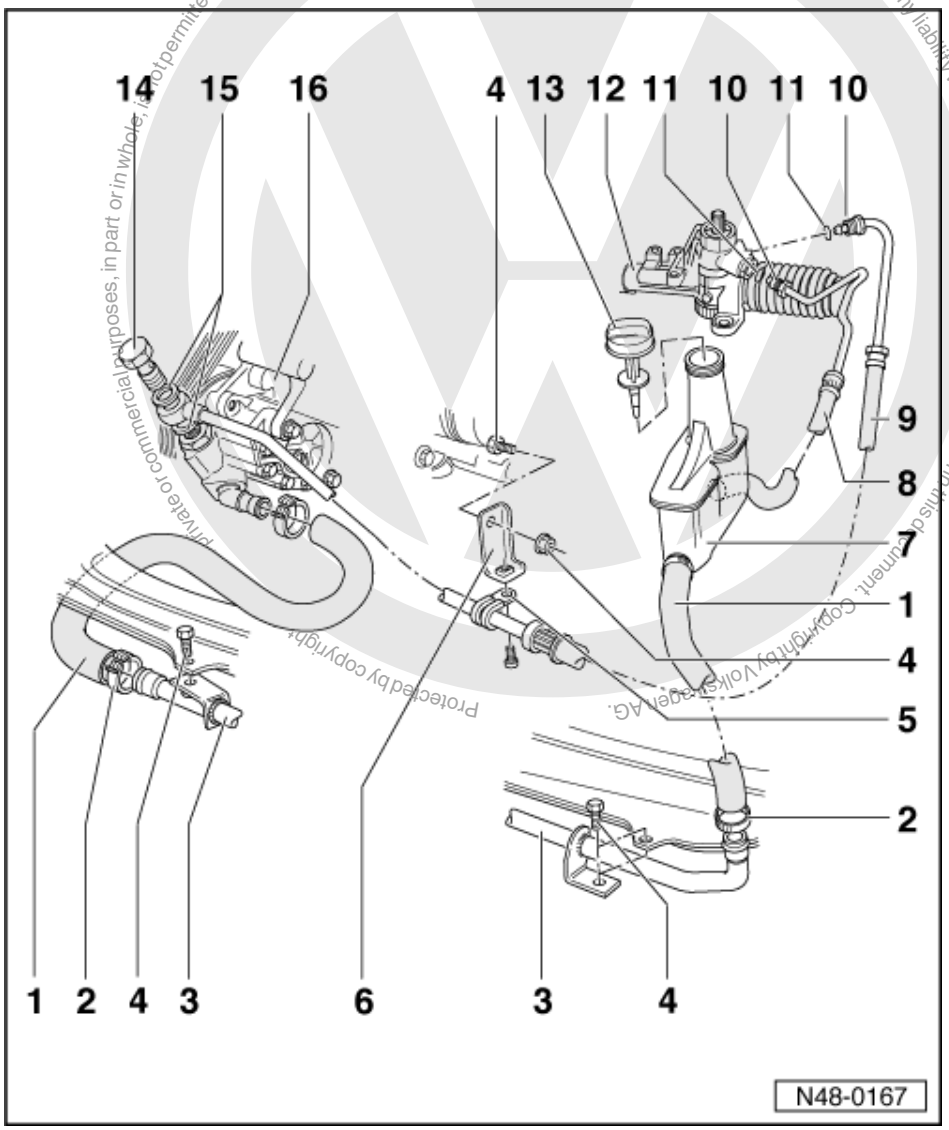

12 Power assisted steering box
- Removing and installing =>Page 203
- Assembly overview: power assisted steering box (TRW) =>Page 212

13 Cap with dip stick
- Oil level: between min. and max. marks

14 Banjo bolt, 30 Nm
15 Sealing ring
- Renew

16 Vane pump
- Removing and installing:
- Fill with oil before installing

Protected by copyright. Copying for private or commercial purposes, in part or in whole, is not permitted unless authorised by Volkswagen AG. Volkswagen AG does not guarantee or accept any liability with respect to the correctness of information in this document. Copyright by Volkswagen AG.
satelettronica

=>Note Page 245

Protected by copyright. Copyright by Volkswagen AG. Volkswagen AG does not guarantee or accept any liability with respect to the correctness of information in this document. Copyright by Volkswagen AG. Reproduction, in whole or in part, for commercial purposes, is not permitted unless authorised by Volkswagen AG.

4.2 - Removing and installing power-assisted steering vane pump, vehicles with 1.4 ltr. engine

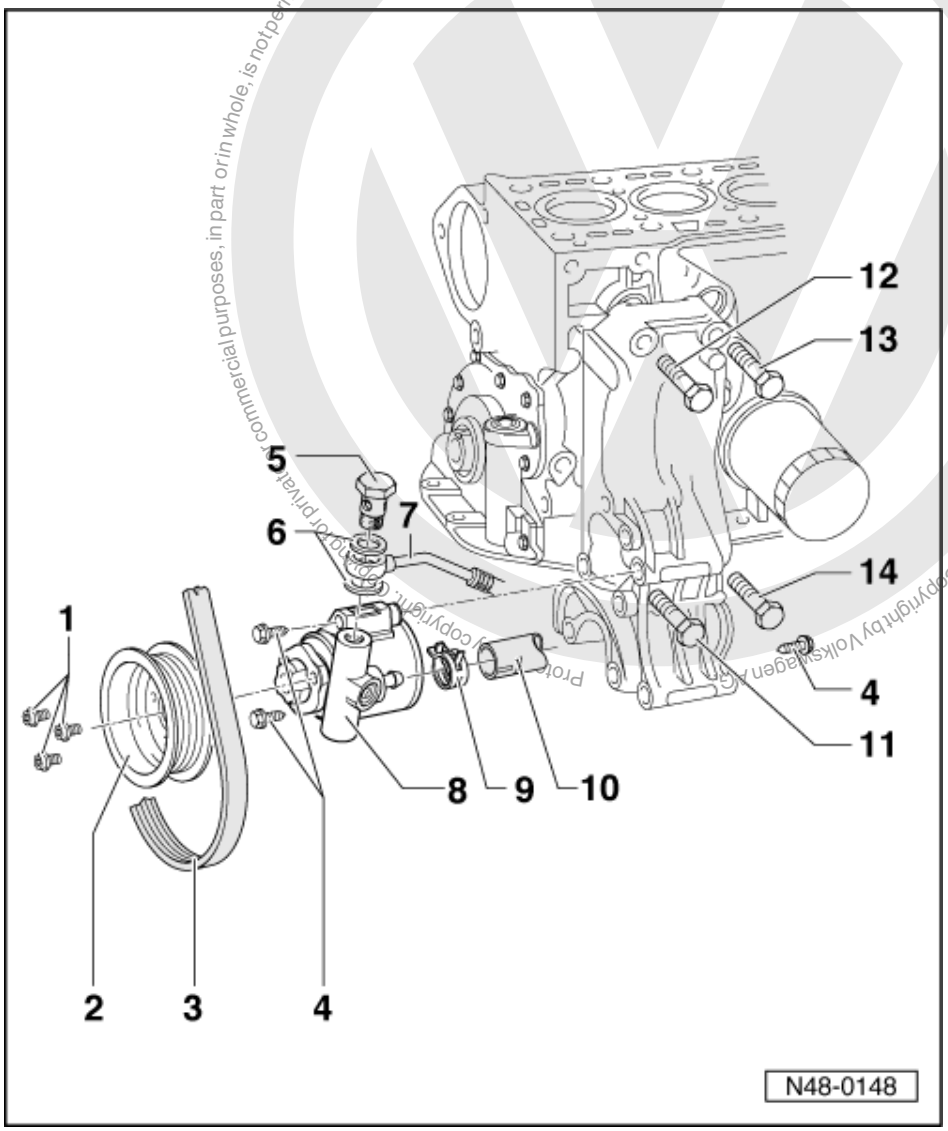

Notes:

- Renew sealing rings.
- Do not reuse drawn off hydraulic oil.
- Filling capacity and type of oil => Notes Page 245

1 **Bolt, 25 Nm**
  - To loosen and tighten, removing and installing ribbed belts => Page 250
  - Counter-hold using 10 mm key in hub. It may be necessary to reduce the key to 9.5 mm AF

2 **Belt pulley**

satelettronica

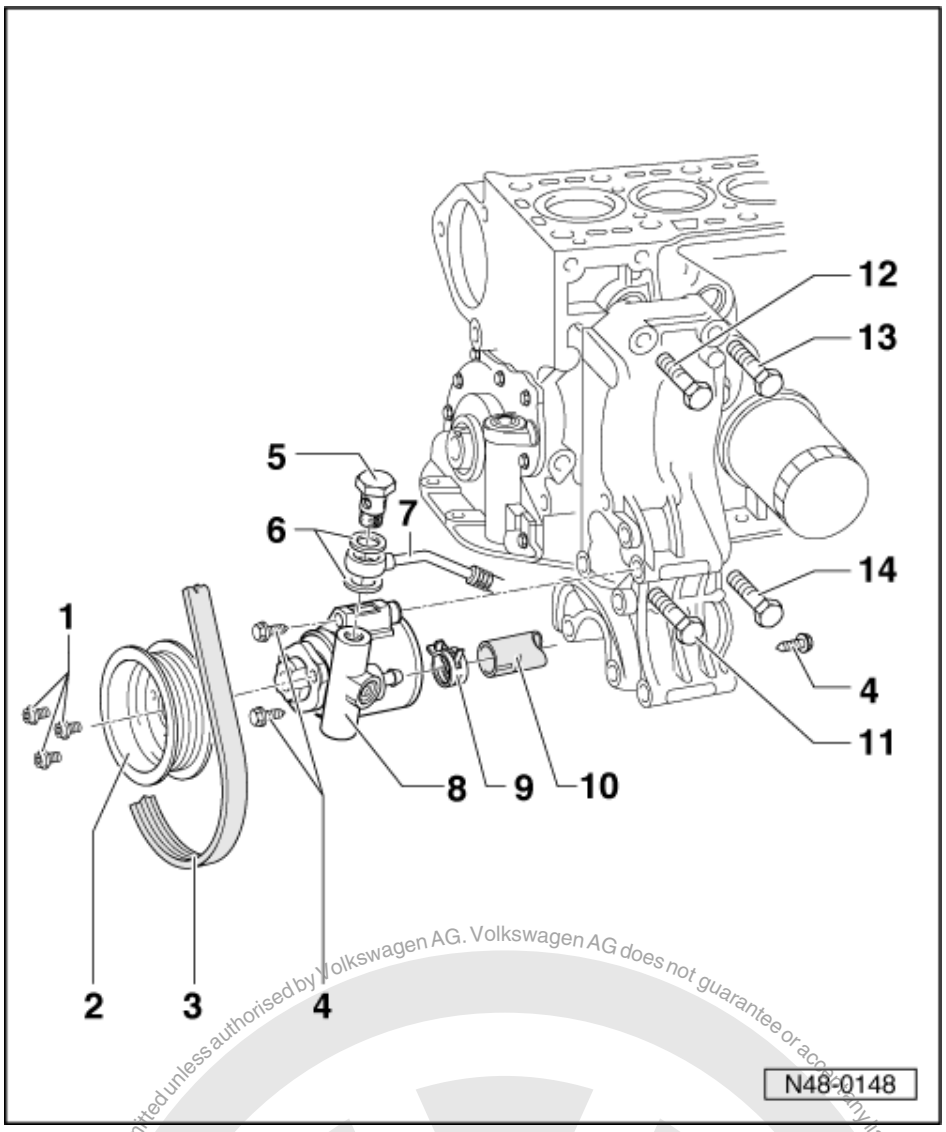

3 Ribbed belts
- Removing and installing => Page 250
- Checking condition

=> Maintenance

4 Hexagon bolt, 25 Nm
5 Banjo bolt, 30 Nm
6 Sealing ring
7 Pressure pipe
8 Vane pump
- Checking delivery pressure => Page 202
- Before installing fill with oil =>Note Page 245

9 Hose clamp
10 Supply hose
11 Hexagon bolt M 10 x 70, 45 Nm
- Assembly sequence => Note below

Protected by copyright. Copying for private or commercial purposes, in part or in whole, is not permitted unless authorised by Volkswagen AG. Volkswagen AG does not guarantee or accept any liability with respect to the correctness of information in this document. Copyright by Volkswagen AG.
satelettronica

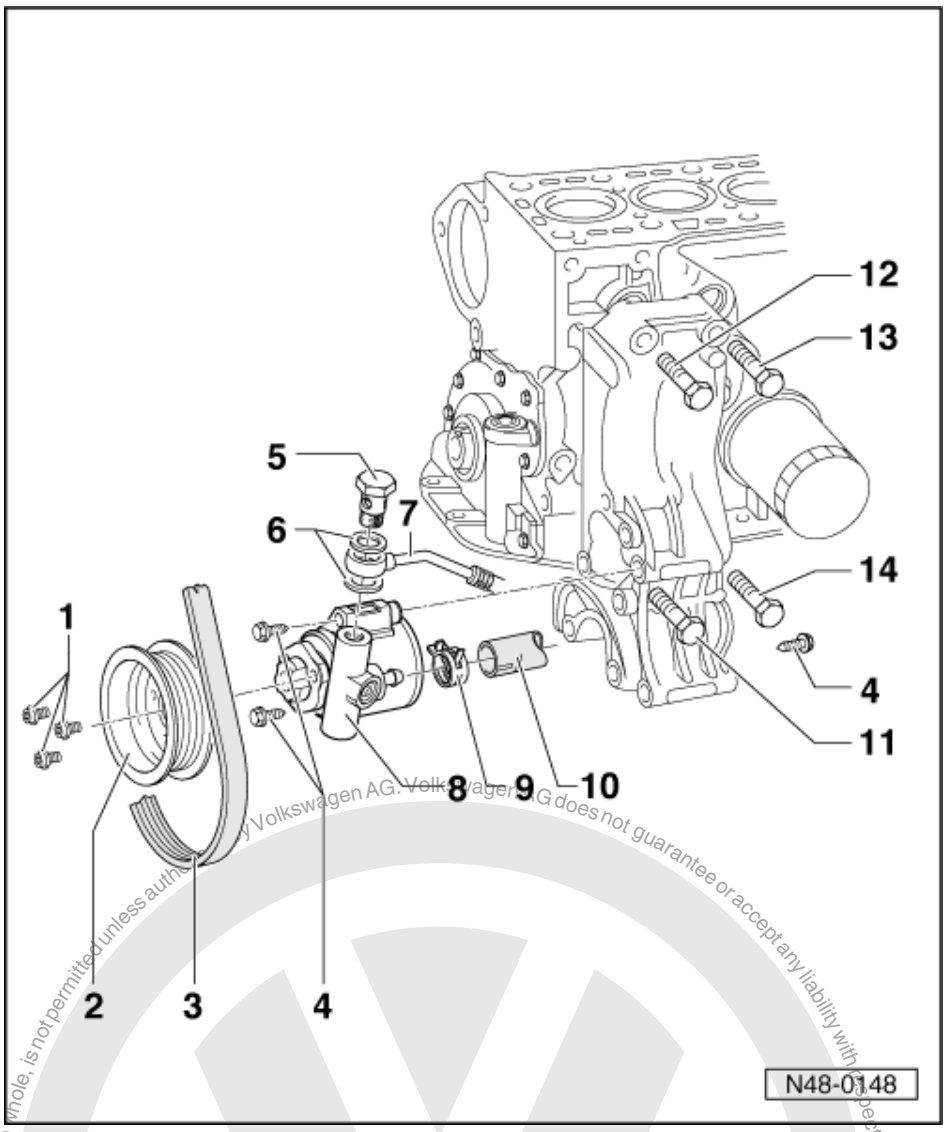

12 Hexagon bolt M 10 x 55, 45 Nm
- Assembly sequence => Note below

13 Hexagon bolt M 10 x 55, 45 Nm
- Assembly sequence => Note below

14 Hexagon bolt M 10 x 70, 45 Nm
- Assembly sequence => Note below

Assembly sequence:

First tighten bolt item 12 and then bolt item 11, and then tighten bolts items 13 and 14.

4.3 - Removing and installing ribbed belt

Note:

Before removing the ribbed belt mark the direction of rotation. When installing the belt ensure it is correctly seated in the pulley.

Protected by copyright. Copyright by Volkswagen AG. Volkswagen AG does not guarantee or accept any liability with respect to the correctness of information in this document. Copyright by Volkswagen AG. Copying for private or commercial purposes, in part or in whole, is not permitted unless authorised by Volkswagen AG.
satelettronica

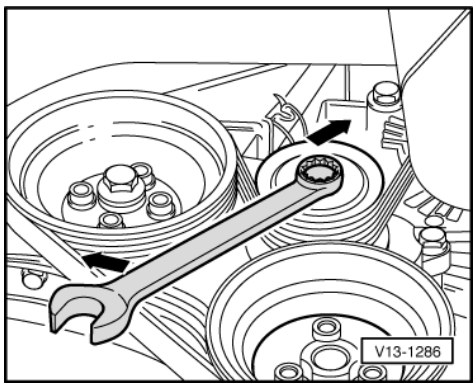

- Remove ribbed belt cover.
- -> Using a spanner on the securing bolt swing tensioning roller in direction of arrow.
- Remove or install ribbed belts.

4.4 - Removing and installing power-assisted steering vane pump, vehicles with 1.6 ltr. engine upwards

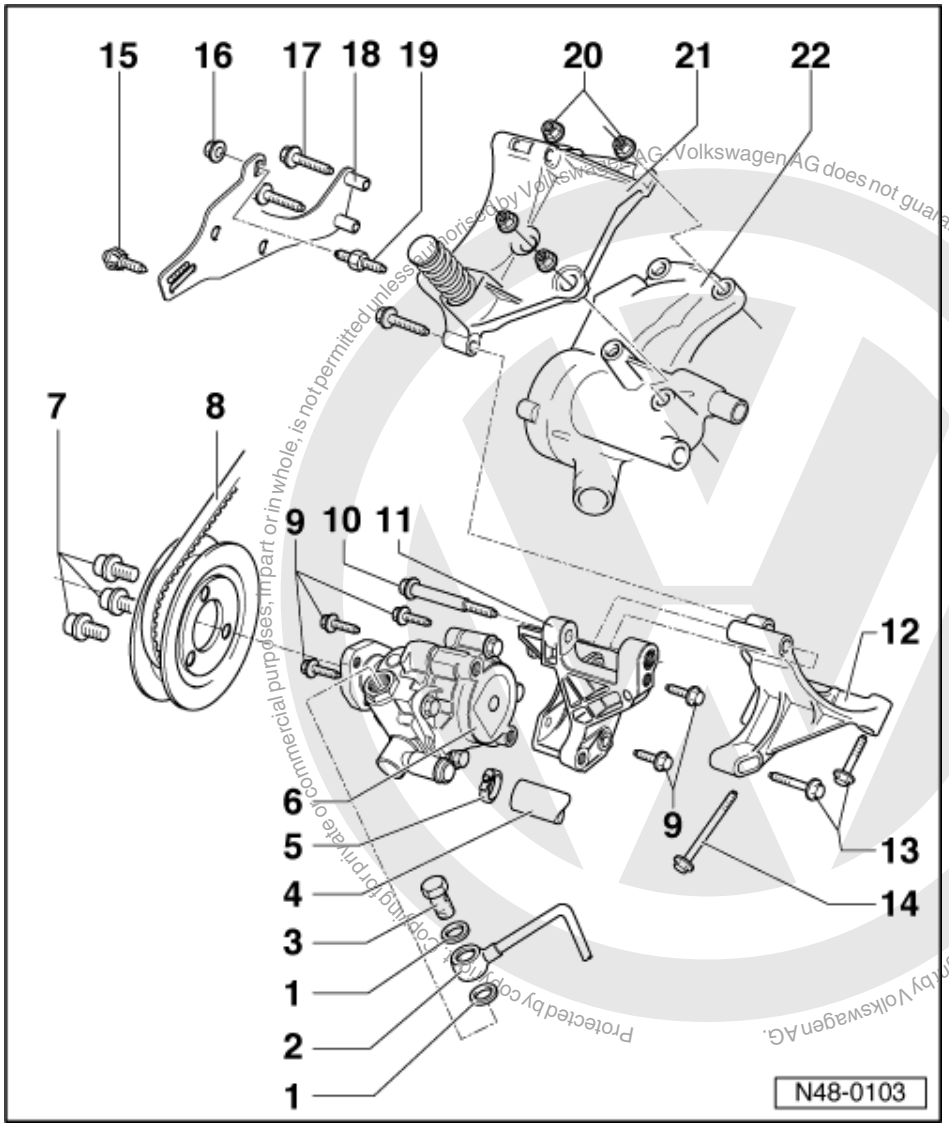

satelettronica

Notes:

- Renew sealing rings.
- Do not reuse drawn off hydraulic oil.
- Filling capacity and type of oil => Notes Page 245

1 Sealing ring
2 Pressure pipe
3 Banjo bolt, 30 Nm
4 Supply hose
5 Hose clip

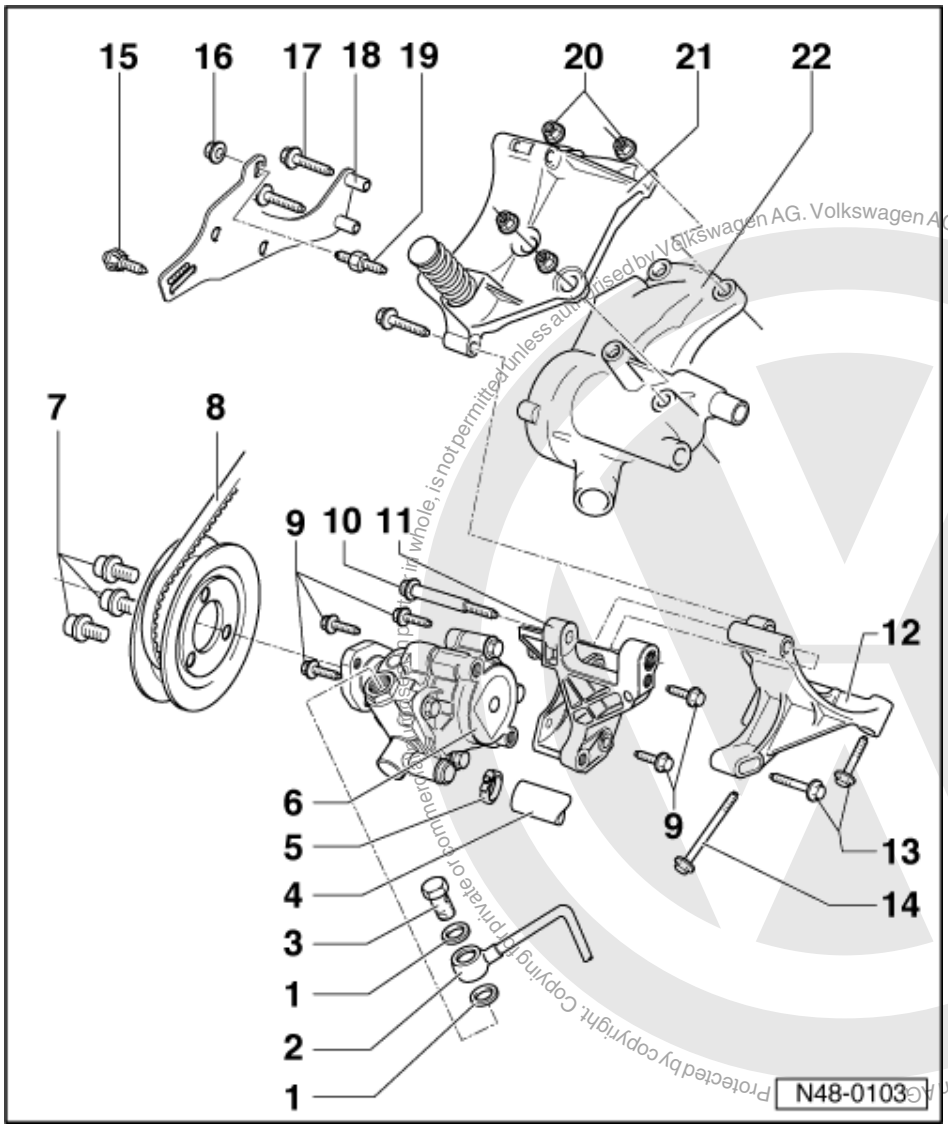

6 Vane pump
- Checking delivery pressure =>Page 202
- Before installing fill with oil =>Notes Page 245
- Installing =>Page 255

7 Hexagon socket head bolt, 25 Nm
- When loosening and tightening counter-hold with V.A.G 1590

8 V-belts
- Allocation

Protected by copyright. Copying for private or commercial purposes, in whole, is not permitted unless authorised by Volkswagen AG. Volkswagen AG does not guarantee or accept any liability with respect to the correctness of information in this document. Copyright by Volkswagen AG.
satelettronica

=> Replacement parts catalogue

- Tensioning => Page 257
- Checking condition

=> Maintenance

9 Hexagon bolt M 8 x 32, 25 Nm

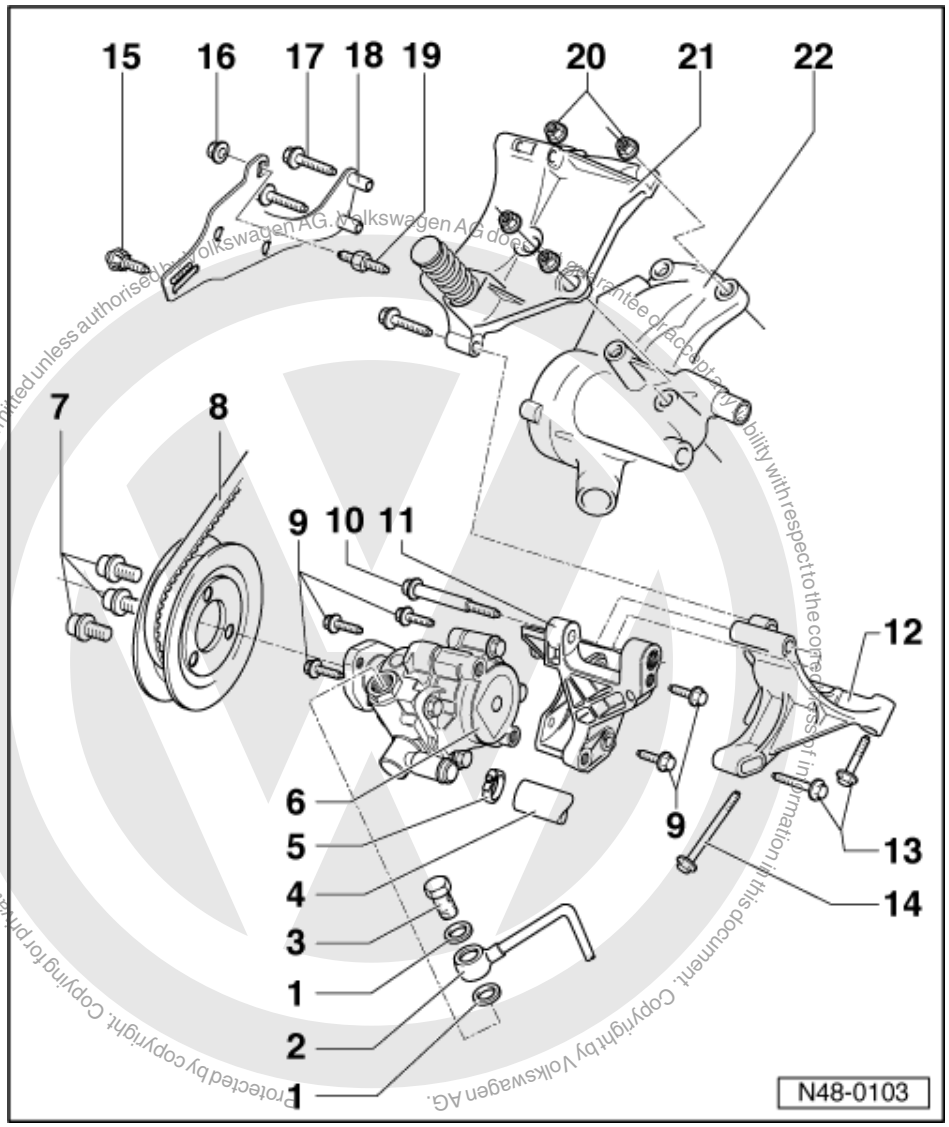

10 Hexagon bolt M 10 x 98, 45 Nm
11 Swivel bracket
- Ensure secured stress free =>Page 255 installing vane pump

12 Mounting bracket
- Ensure secured stress free =>Page 255 installing vane pump

13 Hexagon bolt M 8 x 50, 25 Nm
14 Hexagon bolt M 8 x 85, 25 Nm
15 Adjustment bolt, 25 Nm
16 Hexagon nut, 25 Nm
17 Hexagon bolt M 8 x 42, 25 Nm

Protected by copyright. Copying for private or commercial purposes, in part or in whole, is not permitted unless authorised by Volkswagen AG. Volkswagen AG does not guarantee or accept any liability with respect to the correctness of information in this document. Copyright by Volkswagen AG.
satelettronica

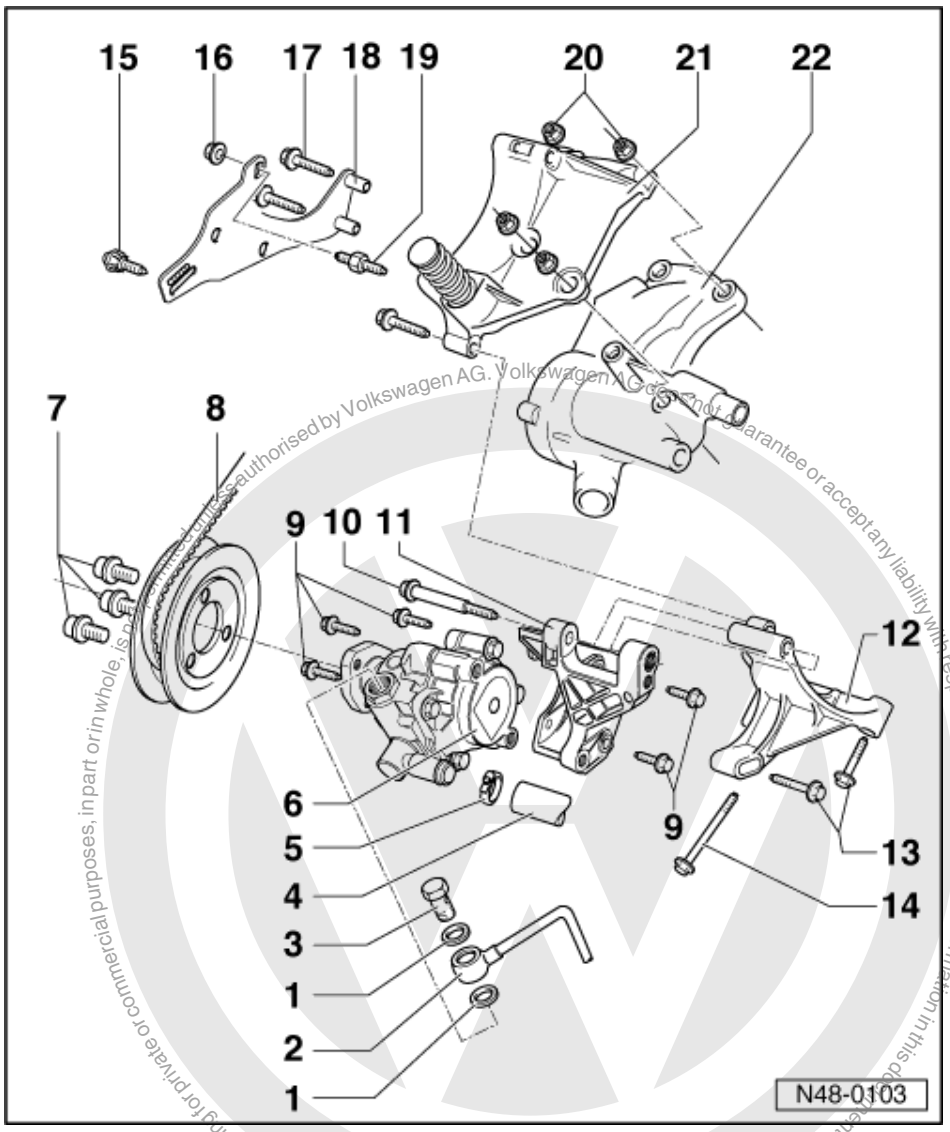

18 Adjustment bracket
19 Stud, 25 Nm
20 Hexagon nut, 25 Nm
21 Console
22 Coolant pump

Protected by copyright. Copying for private or commercial purposes, in part or in whole, is not permitted unless authorised by Volkswagen AG. Volkswagen AG does not guarantee or accept any liability with respect to the correctness of information in this document. Copyright by Volkswagen AG.
satelettronica

4.5 - Installing vane pump

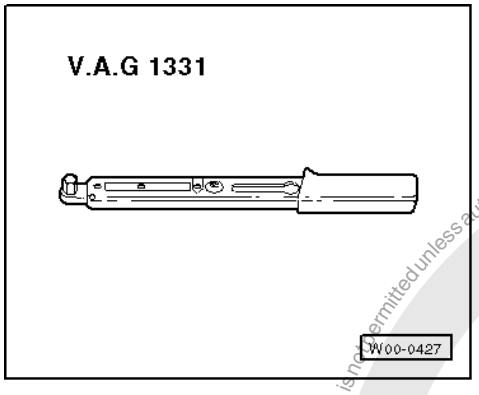

Special tools and workshop equipment required

- V.A.G 1331 Torque wrench

Note:

Seating surfaces and threads must be free of paint on both sides of the vane pump.

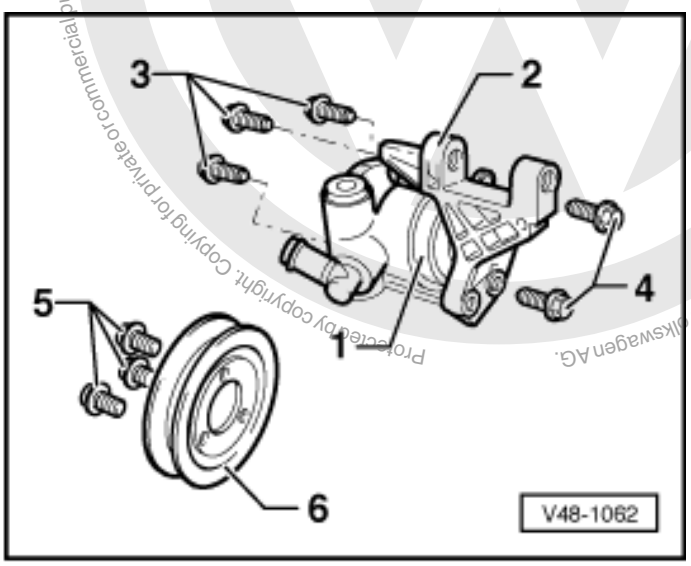

-
- -> Secure vane pump -1- with bolts -3- in swivel bracket -2-.
- Install bolts -4- and tighten.
- Install belt pulley -6- on vane pump -1- and tighten.

Tightening torque:

3 - Hexagon bolt, 25 Nm
4 - Hexagon bolt, 25 Nm
5 - Hexagon socket head bolt, 25 Nm

Protected by copyright. Copying for private or commercial purposes, in part or in whole, is not permitted unless authorised by Volkswagen AG. Volkswagen AG does not guarantee or accept any liability with respect to the correctness of information in this document. Copyright by Volkswagen AG.
satelettronica

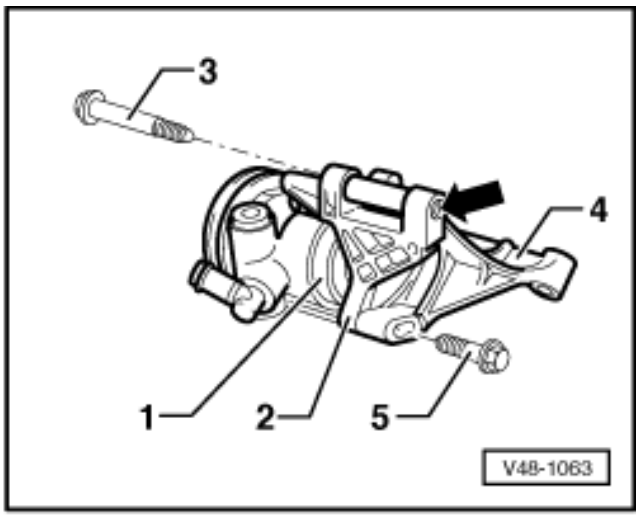

- -> Secure swivel bracket -2- and pump using fitting bolts -3- to mounting -4-.
- Screw fitted bolt -3- into swivel bracket -2- M 10 until threaded bush contacts the mounting -4- (do not tighten).
- Install hexagon bolt -5-, (do not tighten).

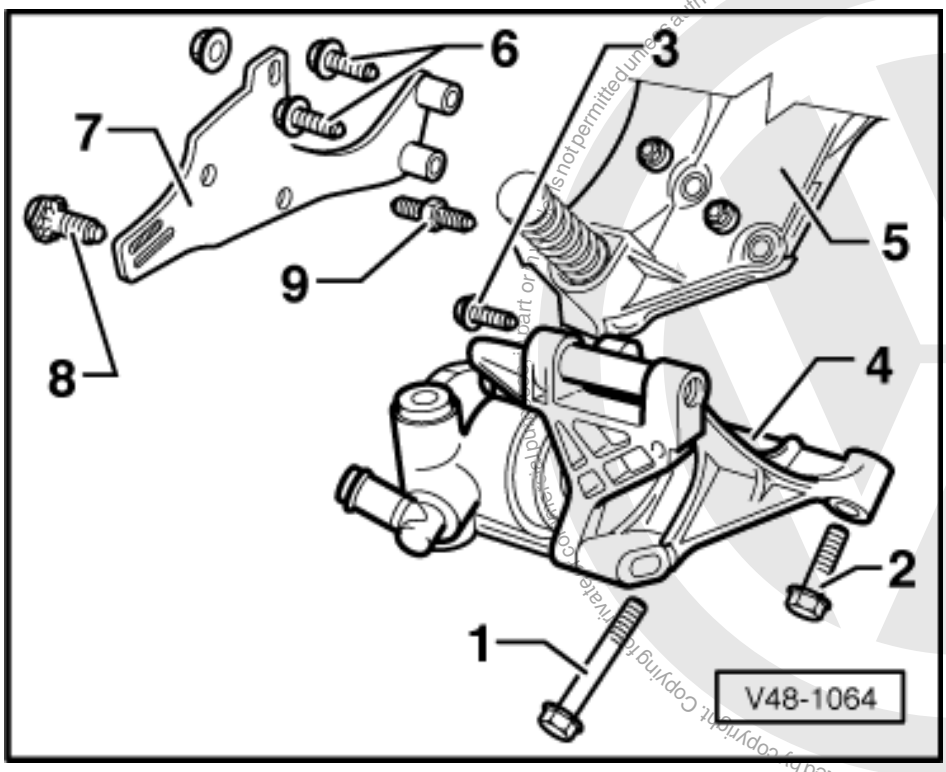

- -> Fit mounting -4- together with vane pump and swivel bracket to console -5- and engine block.
- First screw bolts 1, 2 and 3 in a couple of turns and then tighten in sequence as numbered.

Tightening torque:

Hexagon bolts 1, 2 and 3; 25 Nm

satelettronica
Copyright by Volkswagen AG. VW AG does not guarantee or accept any liability with respect to the correctness of information in this document. Copyright by Volkswagen AG. Reproduction or publication is not permitted unless authorised by Volkswagen AG. Protected by copyright. Copying for private and commercial purposes, in part or in whole, is not permitted unless authorised by Volkswagen AG.

- Fit adjustment bracket -7- using hexagon bolts -6- to engine block.
- Fit adjustment bolt -8- to swivel bracket.
- Tighten hexagon bolts -6- to 25 Nm.
- Install V-belt and tension.

4.6 - Tensioning V-belt

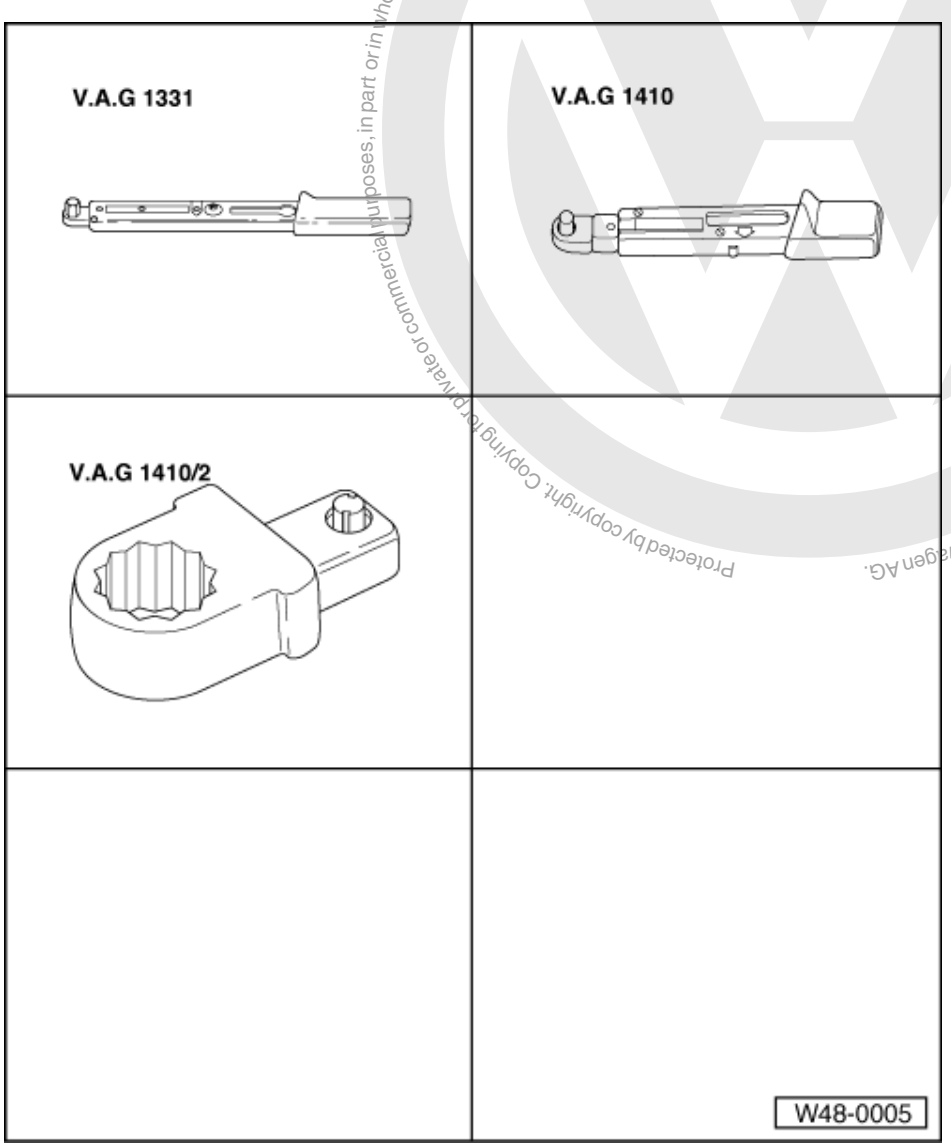

Special tools and workshop equipment required

- V.A.G 1331 Torque wrench
- V.A.G 1410 Torque wrench
- V.A.G 1410/2 Ring spanner

- Loosen hexagon nut -4- 1).

Protected by copyright. Copying for private or commercial purposes, in part or in whole, is not permitted unless authorised by Volkswagen AG. Volkswagen AG does not guarantee or accept any liability with respect to the correctness of information in this document. Copyright by Volkswagen AG.
satelettronica

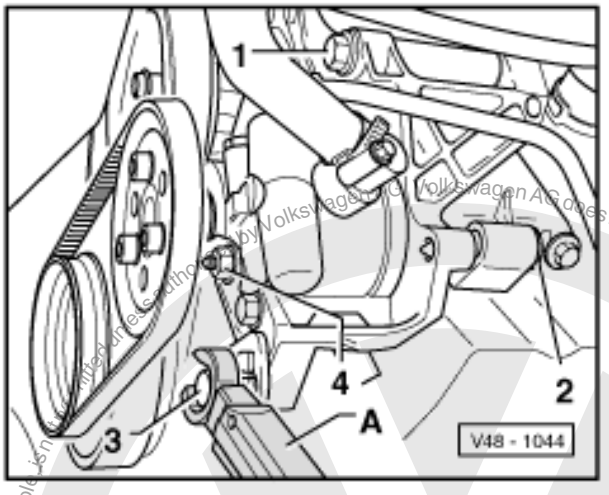

- Loosen hexagon bolt -1- 1).
- Loosen clamping bolt -3- for adjustment bolt -8- (=> Illustration 48-1064 on Page 256) at least one full turn 1).
- -> Tension V-belt by turning adjustment bolt -8-
  (=> Illustration V48-1064 on Page 256) with torque wrench -A- (V.A.G 1410 and V.A.G 1410/2).

Specification:
used belts, 4 Nm
new belts, 7 Nm

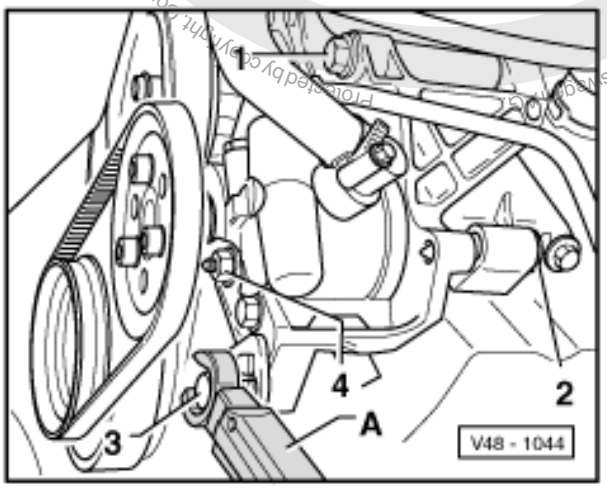

- -> Tighten adjustment bolt clamping bolt -3- to 25 Nm.
- Tighten hexagon bolt -1- to 45 Nm.
- Tighten hexagon bolt -2- and nut -4- to 25 Nm.

satelettronica

Note:

Nut -4- is only installed on petrol engines.

1) If not already loosened.

5 - Vane pump, reservoir, hydraulic pipes 10.99 >

5.1 - Vane pump, reservoir, hydraulic pipes 10.99 >

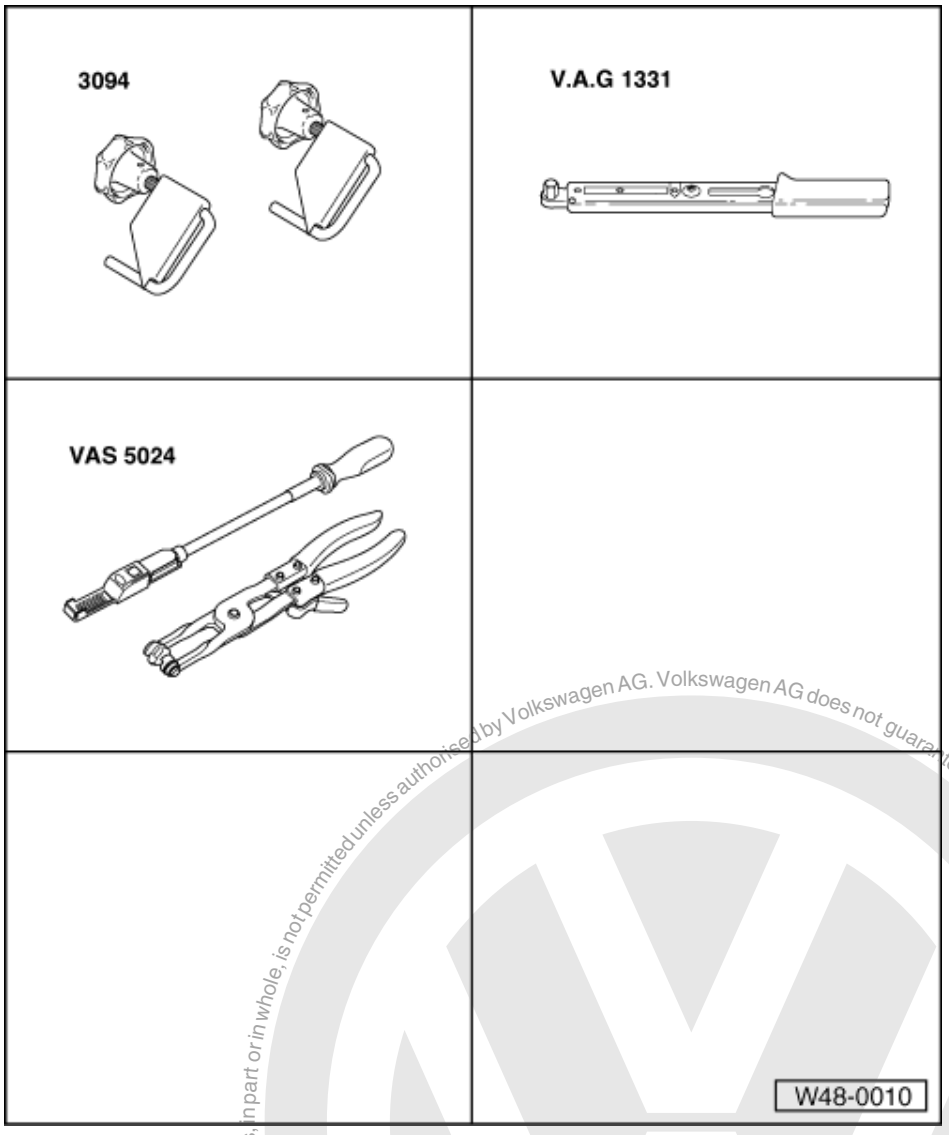

5.2 - Removing and installing vane pump; vehicles with low-mounted vane pump

Special tools and workshop equipment required

- 3094 Hose clamps
- V.A.G 1331 Torque wrench

satelettronica
Protected by copyright. Copying for private or commercial purposes, in part or in whole, is not permitted unless authorised by Volkswagen AG. Volkswagen AG does not guarantee or accept any liability with respect to the correctness of information in this document. Copyright by Volkswagen AG.

- VAS 5024 Assembly pliers

It is not intended that repair work be carried out on the vane pump. If complaints are received determine cause with the help of pressure tests, leakage test and fault finding programme running gear No. 10. If a fault exists renew vane pump.

Notes:

- Pumps supplied as replacement parts are not filled with oil. Therefore it is essential to fill the pump with hydraulic oil Part No. G 002 000 and to rotate it by hand, otherwise the pump may be damaged or noisy during operation.
- Type of oil: hydraulic oil Part No. G 002 000
- Oil system capacity: 0.7 ... 0.9 ltr.

Removing

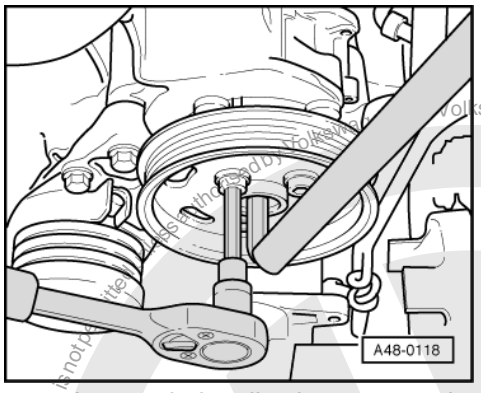

- -> Loosen belt pulley hexagon socket head bolt.

  Counter-hold with a hexagon key if necessary.

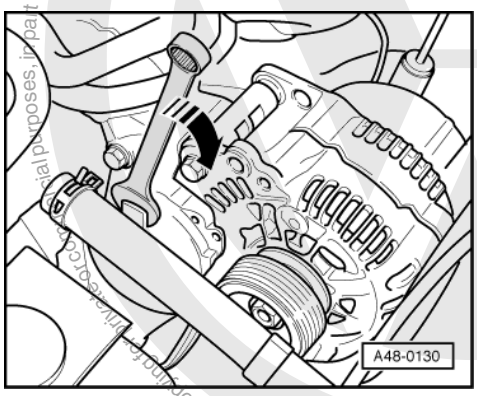

- -> Turn tensioning device in direction of arrow to relieve tension on ribbed belt.
- Mark direction of rotation of ribbed belt.
- Remove ribbed belt.
- Unscrew belt pulley hexagon socket head bolt.

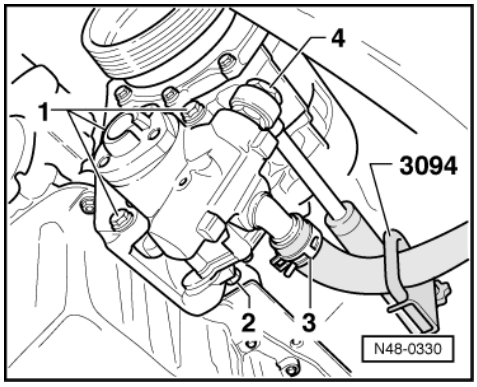

Volkswagen AG does not guarantee or accept any liability with respect to the correctness of information in this document. Copyright by Volkswagen AG
satelettronica

- -> Clamp off suction hose with hose clamps -3094-.
- Open spring-type clip -3- and pull off suction hose.

  Use special tool V.A.S 5024 for this.

- Unscrew banjo bolt -4-.
  - Seal pressure pipe/hose with a plastic bag or similar.
- Unscrew hexagon bolts -1- and -2-.
- Take out pump.

Installing

- Fill vane pump with hydraulic oil.

  Fill pump with oil via suction union.

- Turn hub by hand until oil emits from pressure side.

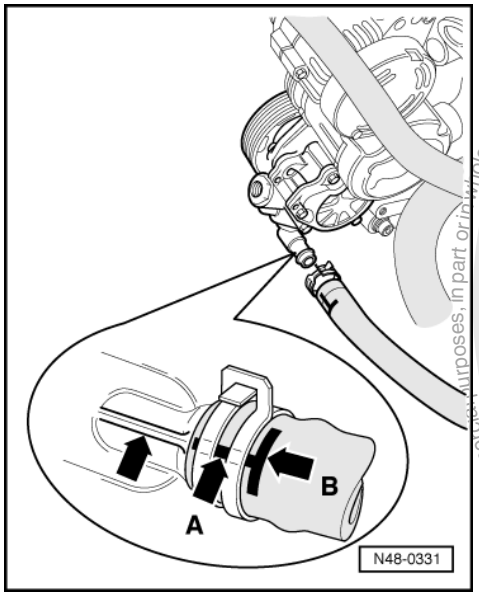

- Fit vane pump into bracket and tighten bolts to 25 Nm.
- -> Fit suction hose and install spring-type clip.

  The mark -arrow A- must align with casting seam -arrow-.
  The spring-type clip must close off mark -arrow B-.

- Fit new sealing rings onto banjo bolt.
- Tighten banjo bolt to 38 Nm.

Installation is continued in reverse sequence

Protected by copyright. Copyright by Volkswagen AG. Volkswagen AG does not guarantee or accept any liability with respect to the correctness of information in this document. Copyright by Volkswagen AG. Reproduction, in part or in whole, is not permitted unless authorised by Volkswagen AG. Volkswagen AG does not guarantee or accept any liability with respect to the correctness of information in this document. Copyright by Volkswagen AG.
satelettronica

5.3 - Removing and installing vane pump; vehicles with high-mounted vane pump

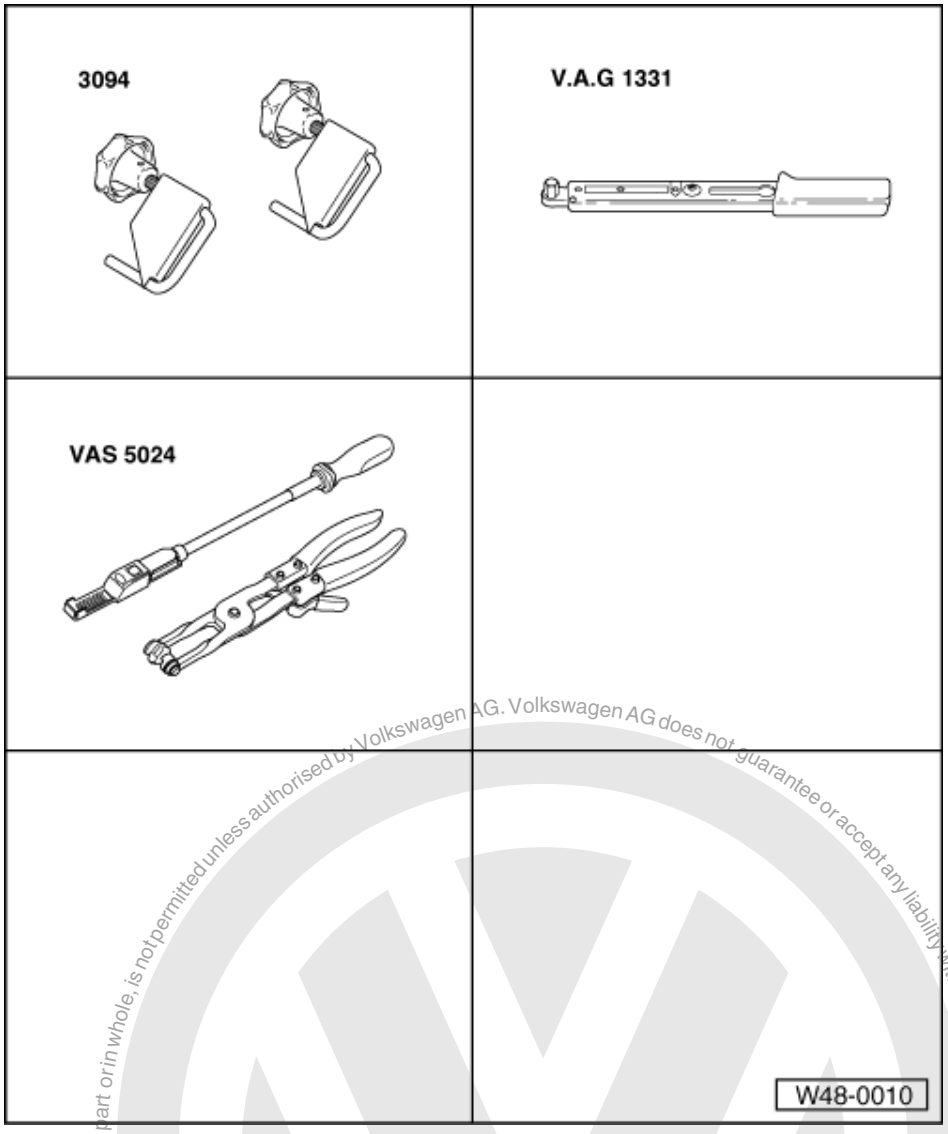

Special tools and workshop equipment required

- 3094 Hose clamps
- V.A.G 1331 Torque wrench
- VAS 5024 Assembly pliers

It is not intended that repair work be carried out on the vane pump. If complaints are received determine cause with the help of pressure tests, leakage test and fault finding programme running gear No. 10. If a fault exists renew vane pump.

Notes:

- Pumps supplied as replacement parts are not filled with oil. Therefore it is essential to fill the pump with hydraulic oil Part No. G 002 000 and to rotate it by hand, otherwise the pump may be damaged or noisy during operation.
- Type of oil: hydraulic oil Part No. G 002 000
- Oil system capacity: 0.7 ... 0.9 ltr.

Copyright by Volkswagen AG. Volkswagen AG does not guarantee or accept any liability with respect to the correctness of information in this document. Copying for private or commercial purposes, in part or in whole, is not permitted unless authorised by Volkswagen AG.

satelettronica

Removing

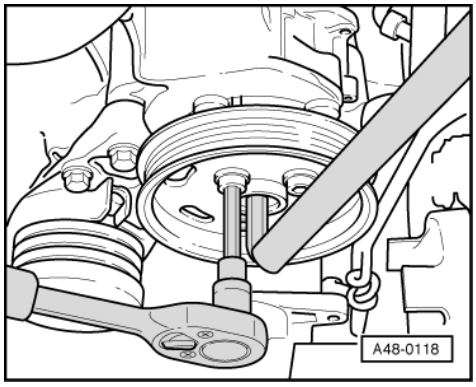

- -> Loosen belt pulley hexagon socket head bolt.

  Counter-hold with a hexagon key if necessary.

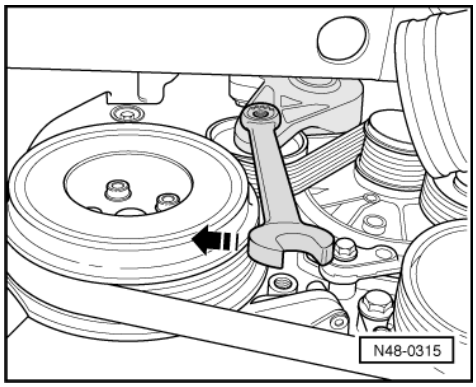

- -> Turn tensioning device in direction of arrow to relieve tension on ribbed belt.

  For ease of illustration, the relieving of belt pulley tension is shown without the charge air pipe.

- Mark direction of rotation of ribbed belt.
- Remove ribbed belt.
- Unscrew belt pulley hexagon socket head bolt.

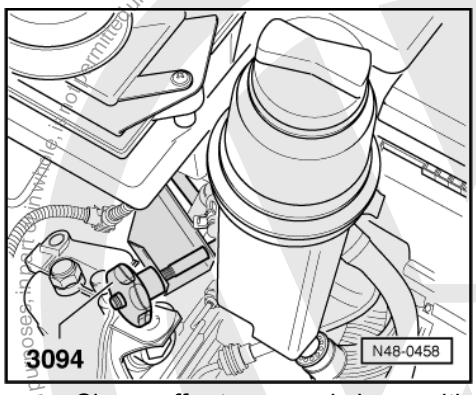

- -> Clamp off return supply hose with hose clamps -3094-.

satelettronica

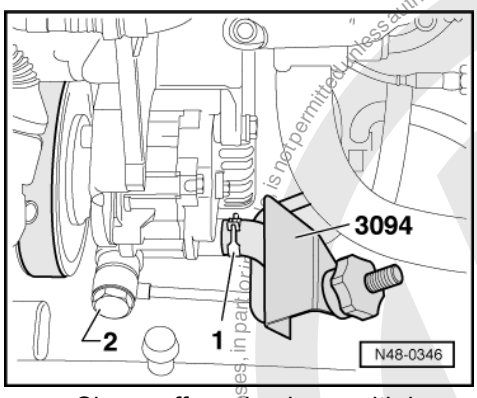

- -> Clamp off suction hose with hose clamps -3094-.
- Open spring-type clip -1- and pull off suction hose.

  Use special tool V.A.S 5024 for this.

- Remove banjo bolt -2-.
  - Seal pressure pipe/hose with a plastic bag or similar.

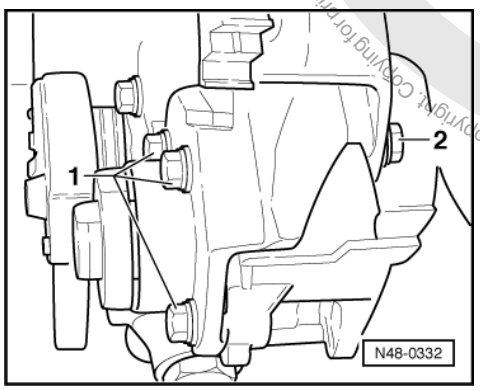

- -> Unscrew hexagon bolts -1- and -2-.
- Take out pump.

Installing

- Fill vane pump with hydraulic oil.

  Fill pump with oil via suction union.

- Turn hub by hand until oil emits from pressure side.

Protected by copyright. Copying for private or commercial purposes, in part or in whole, is not permitted unless authorised by Volkswagen AG. Volkswagen AG does not guarantee or accept any liability with respect to the correctness of information in this document. Copyright by Volkswagen AG.
satelettronica

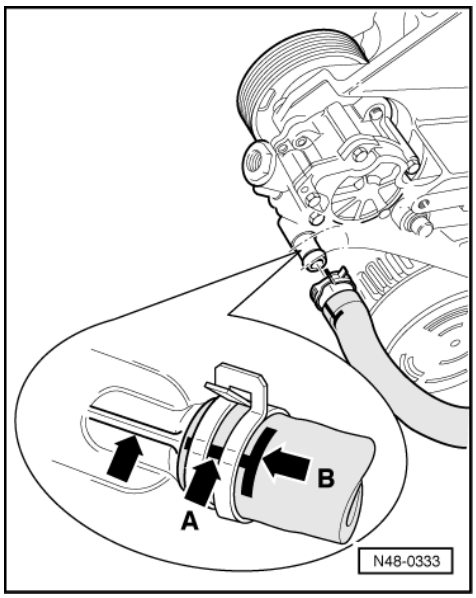

- Fit vane pump into bracket and tighten bolts to 25 Nm.
- -> Install suction hose and spring-type clip.

  The mark -arrow A- must align with casting seam -arrow-.
  The spring-type clip must close off mark -arrow B-.

- Fit new sealing rings onto banjo bolt.
- Tighten banjo bolt to 38 Nm.

Installation is continued in reverse sequence

Protected by copyright. Copying for private or commercial purposes, in part or in whole, is not permitted unless authorised by Volkswagen AG. Volkswagen AG does not guarantee or accept any liability with respect to the correctness of information in this document. Copyright by Volkswagen AG.
satelettronica

5.4 - Assembly overview: Vane pump with hydraulic pipes/hoses

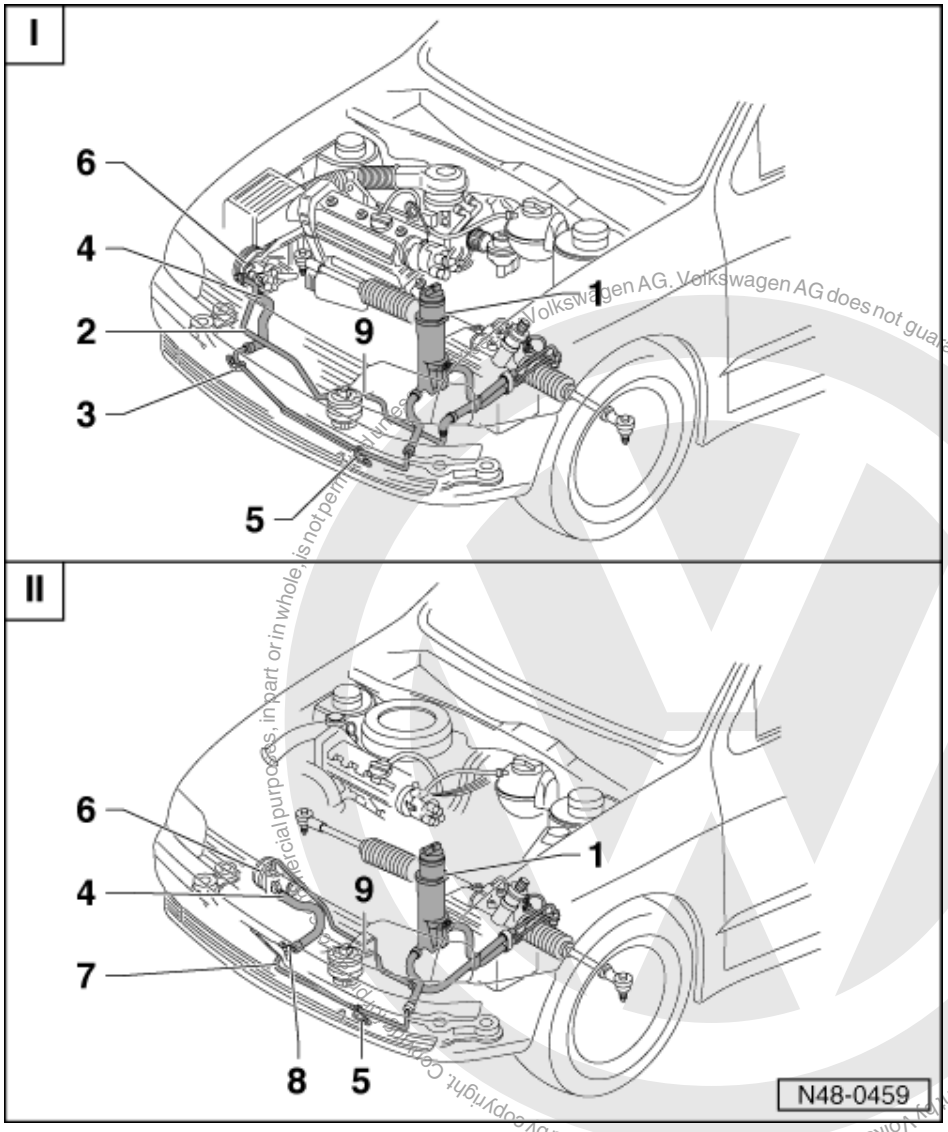

Protected by copyright. Copyright by Volkswagen AG. Volkswagen AG does not guarantee or accept any liability with respect to the correctness of information in this document. Copyright by Volkswagen AG. Commercial purposes, in part or in whole, is not permitted.

I - Vehicles with high mounted vane pump

II - Vehicles with low mounted vane pump

1 Reservoir
Dismantling and assembling instructions => Page 269

2 Securing pressure hose/pipe
Vehicles with SDI and TDI engines and with air conditioning
Dismantling and assembling instructions => Page 270

3 Suction hose/pipe mounting
Vehicles with SDI and TDI engines and with air conditioning on engine mount

satelettronica

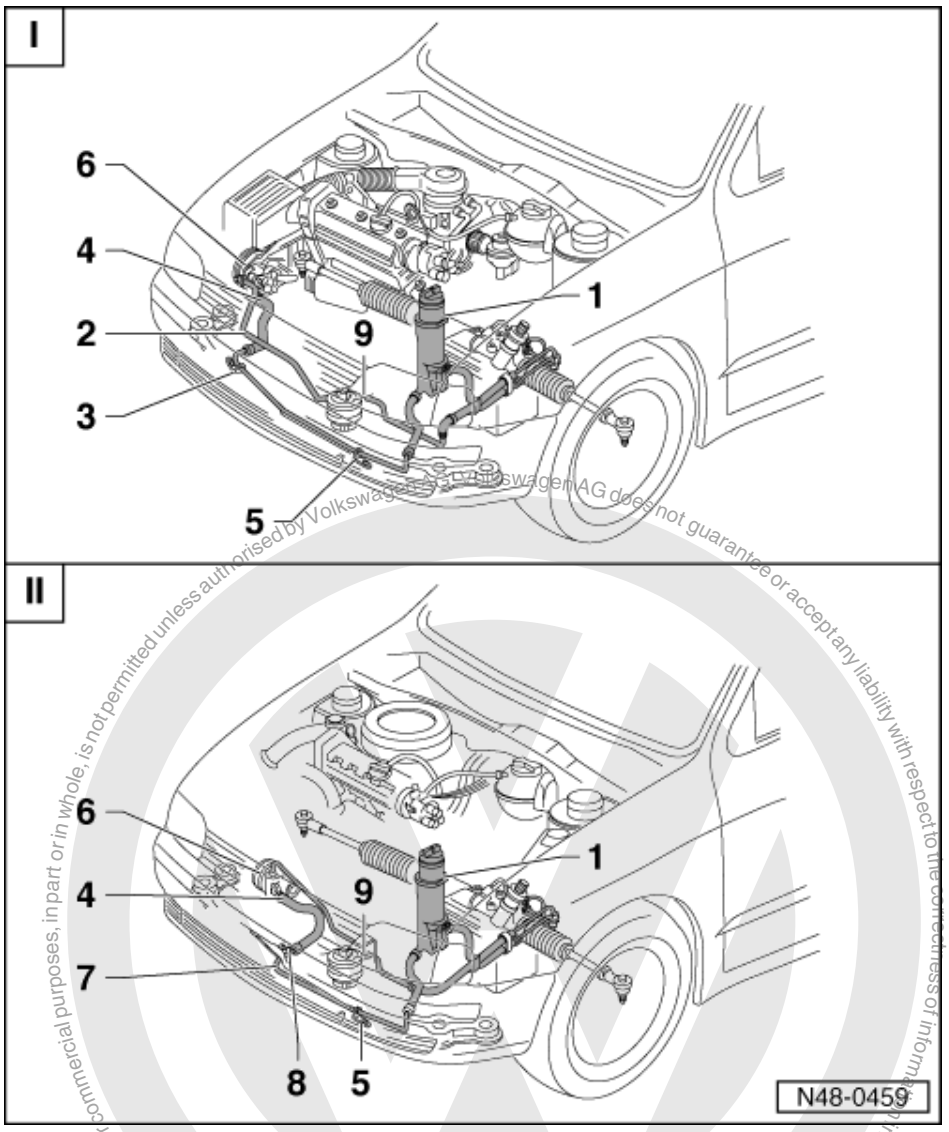

4 Suction hose mounting
- On vane pump

5 Suction hose/pipe mounting
- On engine mounting

6 Vane pump
- Checking delivery pressure => Page 202
- Before installing fill with oil =>Note Page 259

7 Suction hose/pipe mounting

Vehicles with 1.0 ltr. and 1.4 ltr. engines and with air conditioning
Dismantling and assembling instructions => Page 271
Vehicles with 1.0 ltr. and 1.4 ltr. engines without air conditioning
Dismantling and assembling instructions => Page 271

Copyright by Volkswagen AG. Protected by copyright. Commercial use and distribution of this document, in part or in whole, is not permitted unless authorised by Volkswagen AG. Volkswagen AG does not guarantee or accept any liability with respect to the correctness of information in this document.
satelettronica

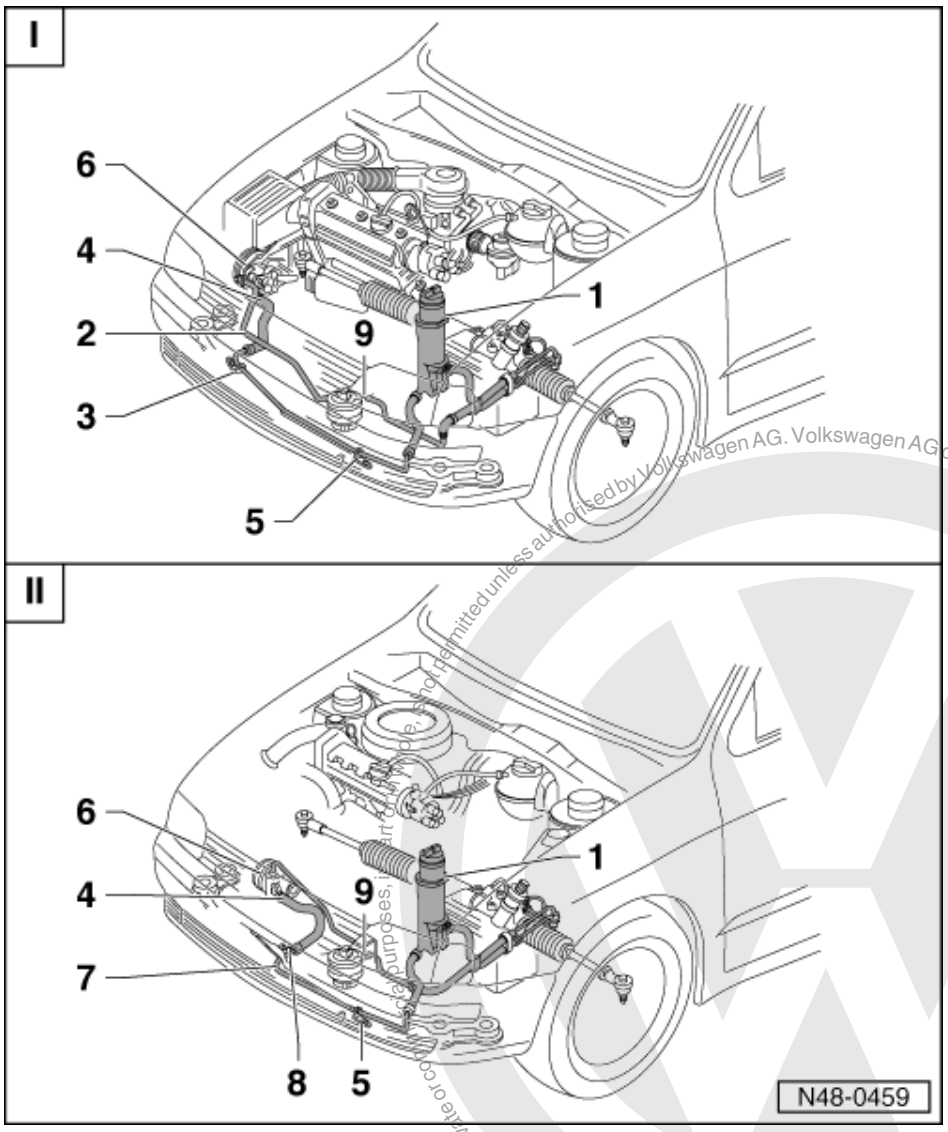

8 Suction hose/pipe mounting

Vehicles with 1.6 ltr. engine, with or without air conditioning
Vehicles with SDI and TDI engines and without air conditioning
Dismantling and assembling instructions => Page 271

9 Pressure hose/pipe mounting

- On engine mounting for all engines

Protected by copyright. Copying for private or commercial purposes, in part or in whole, is not permitted unless authorised by Volkswagen AG. Volkswagen AG does not guarantee or accept any liability with respect to the correctness of information in this document. Copyright by Volkswagen AG.
satelettronica

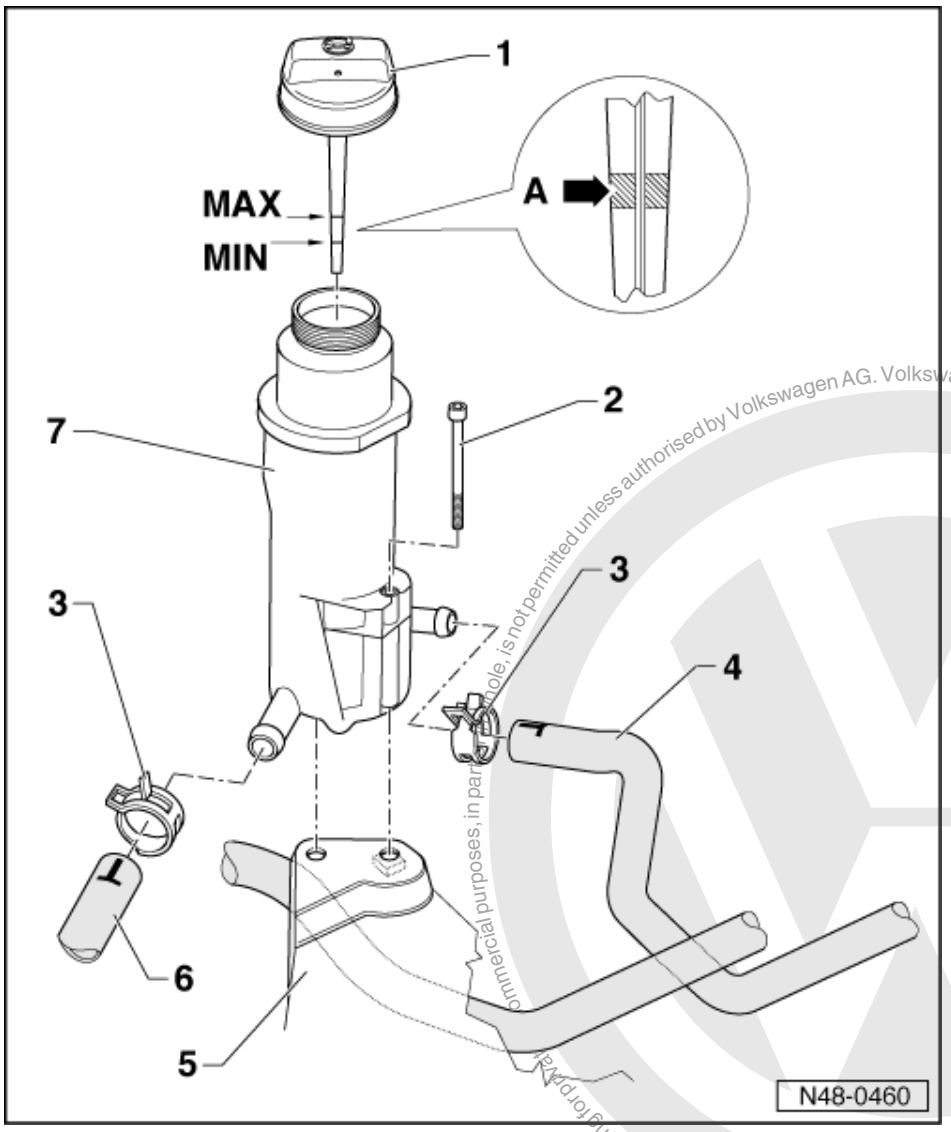

Dismantling and assembling reservoir

1 Cap with dip stick
- Oil level: between min. and max. marks; Engine temperature approx. 50° C
- Arrow A: oil level with engine cold
- With engine cold, oil level must not rise above Min. marking
- Check oil level with cap screw on

2 Hexagon socket head bolt
3 Hose clamp
4 Return hose
5 Longitudinal member
6 Suction hose
7 Reservoir

Protected by copyright. Copying for private or commercial purposes, in part or whole, is not permitted unless authorised by Volkswagen AG. Volkswagen AG does not guarantee or accept any liability with respect to the correctness of information in this document. Copyright by Volkswagen AG.
satelettronica

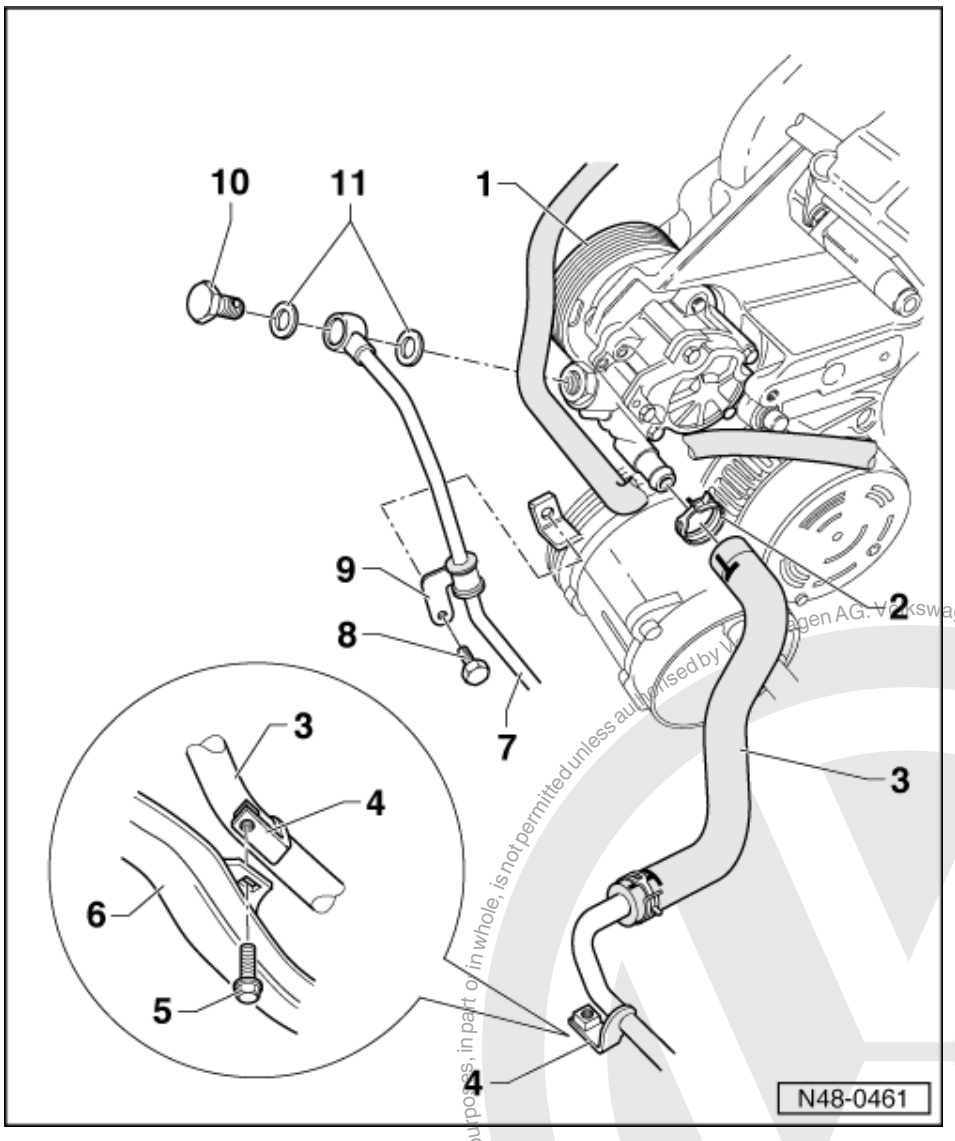

Securing pressure pipe and suction hose on SDI and TDI engines with air conditioning

1 Vane pump
- Checking delivery pressure => Page 202
- Before installing fill with oil =>Note Page 259

2 Hose clamp
3 Suction hose
4 Mounting bracket
5 Hexagon bolt, 10 Nm
6 Engine mounting
7 Pressure hose
8 Hexagon bolt, 22 Nm
9 Clamp
10 Banjo bolt, 38 Nm
11 Sealing ring
- Renew

Protected by copyright. Copying for private or commercial purposes, in part or in whole, is not permitted unless authorised by Volkswagen AG. Volkswagen AG does not guarantee or accept any liability with respect to the correctness of information in this document. Copyright by Volkswagen AG.
satelettronica

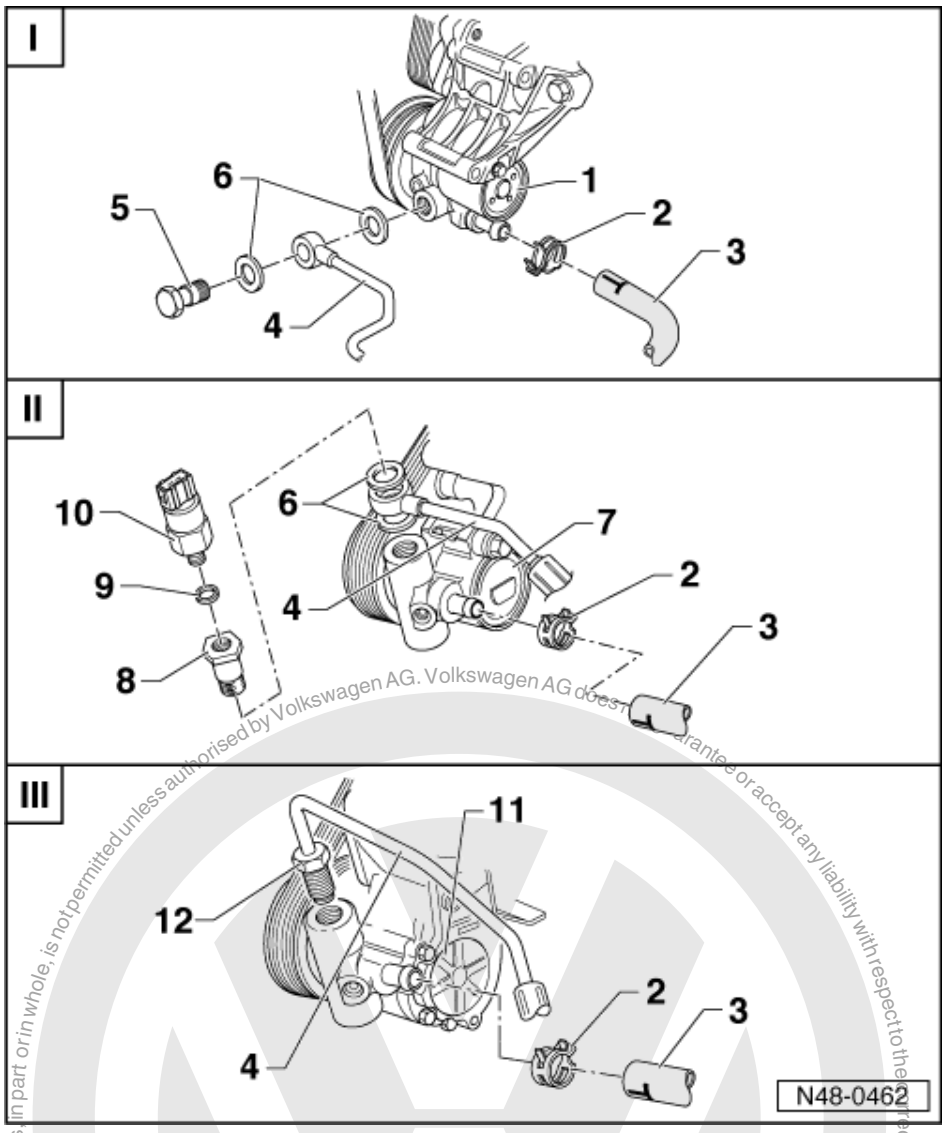

I - Securing pressure pipe and suction hose on vehicles with 1.0 ltr. and 1.4 ltr. engines with air conditioning

II - Securing pressure pipe and suction hose on vehicles with 1.6 ltr engine with or without air conditioning and SDI or TDI engines without air conditioning

III - Securing pressure pipe and suction hose on vehicles with 1.0 ltr. and 1.4 ltr. engines without air conditioning

1 Vane pump
- For vehicles with 1.0 ltr. and 1.4 ltr. engines with air conditioning
- Checking delivery pressure => Page 202
- Before installing fill with oil =>Note Page 259

2 Clamp
3 Suction hose
4 Pressure hose

Protected by copyright. Copyright by Volkswagen AG. Volkswagen AG does not guarantee or accept any liability with respect to the correctness of information in this document. Copyright by Volkswagen AG. Protected by copyright. Copying for private or commercial purposes, in part or in whole, is not permitted unless authorised by Volkswagen AG.
satelettronica

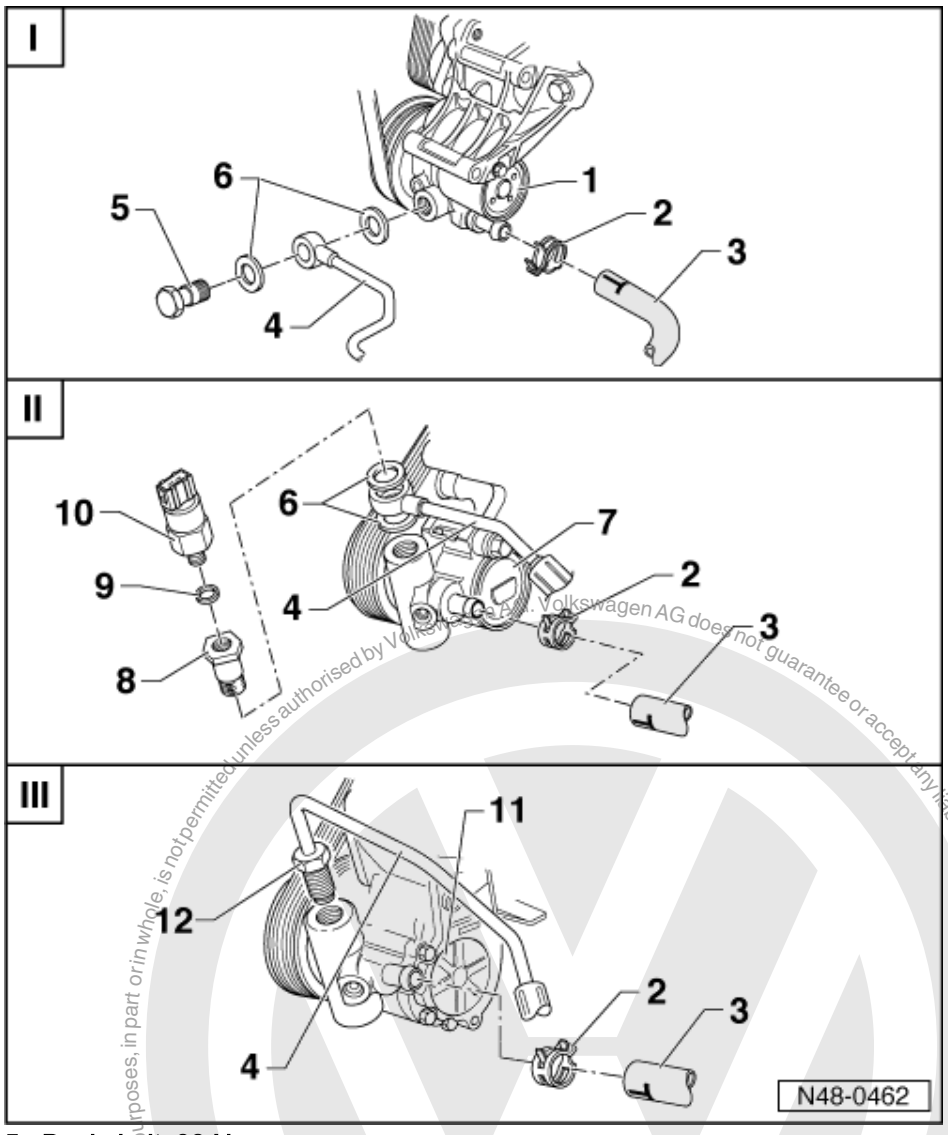

5 Banjo bolt, 38 Nm
6 Sealing ring
- Renew

7 Vane pump
- For vehicles with 1.6 ltr. engine with or without air conditioning and SDI and TDI engines without air conditioning
- Checking delivery pressure => Page 202
- Before installing fill with oil =>Note Page 259

8 Banjo bolt, 38 Nm
9 Sealing ring
- Renew

10 Pressure switch
- Switches at 40 bar
- Tighten to 15 Nm

Protected by copyright. Copyright by Volkswagen AG.
Copyright by Volkswagen AG. Volkswagen AG does not guarantee or accept any liability with respect to the correctness of information in this document.
Reproduction, even in part, for commercial purposes, in part or in whole, is not permitted unless authorised by Volkswagen AG.
satelettronica

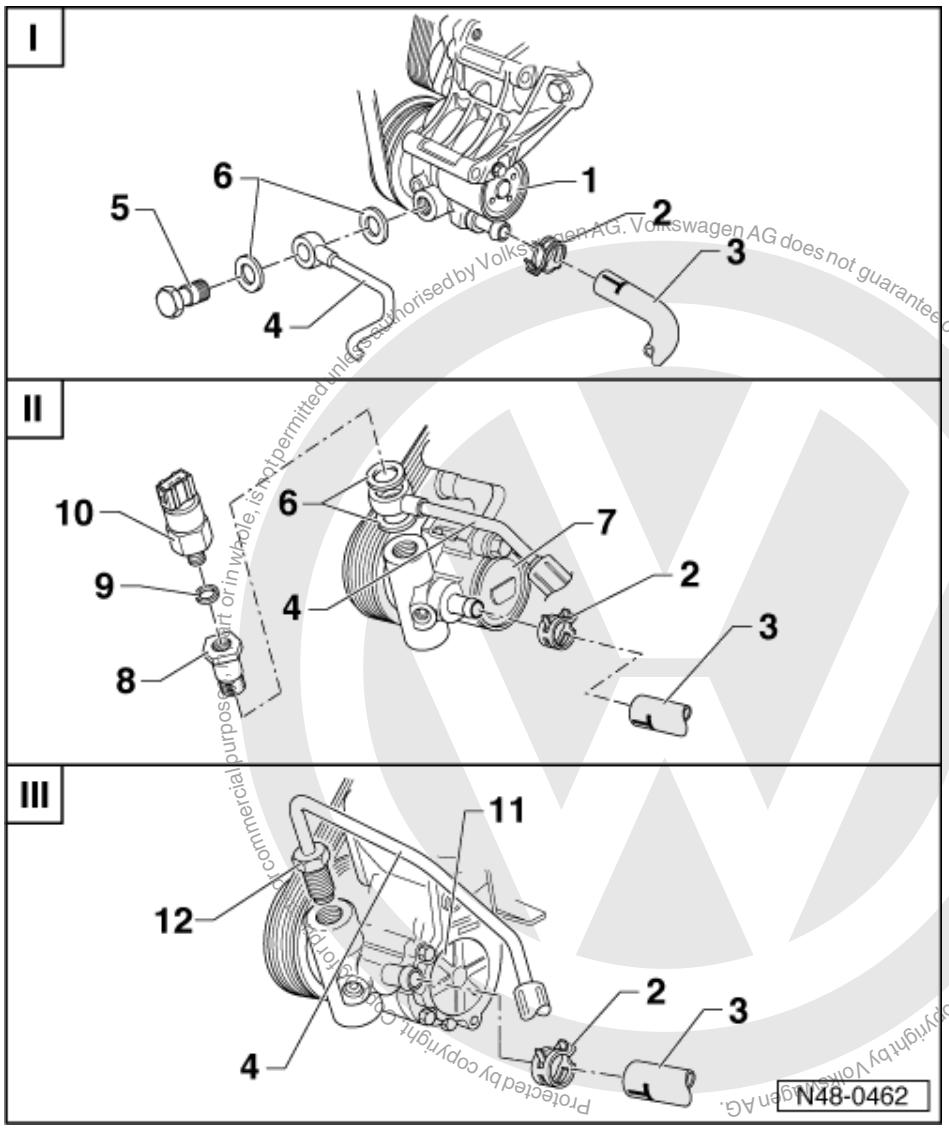

11 Vane pump

- For vehicles with 1.0 ltr. and 1.4 ltr. engines without air conditioning
- Checking delivery pressure => Page 202
- Before installing fill with oil =>Note Page 259

12 Union nut, 30 Nm

Protected by copyright. Copyright by Volkswagen AG.
Volkswagen AG does not guarantee or accept any liability with respect to the correctness of information in this document. Copyright by Volkswagen AG.
For commercial purposes, in part or in whole, is not permitted unless authorised by Volkswagen AG.
satelettronica

5.5 - Assembly overview for low-mounted vane pump

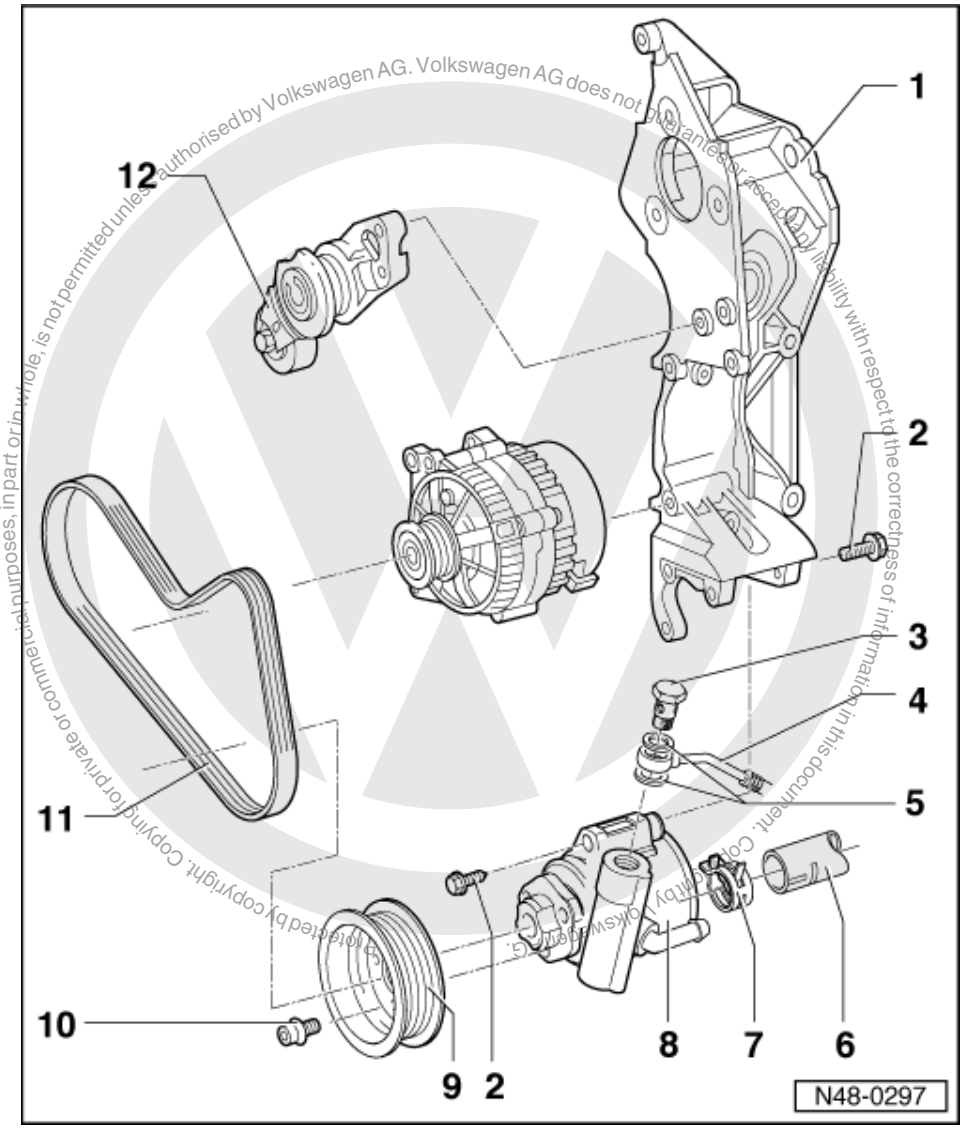

Protected by copyright. Copyright for private or commercial purposes, in part or in whole, is not permitted unless authorised by Volkswagen AG. Volkswagen AG does not guarantee or accept any liability with respect to the correctness of information in this document. Copyright by Volkswagen AG.

Vehicles with low-mountedvane pump

1 Bracket
2 Hexagon bolt, 25 Nm
3 Banjo bolt, 38 Nm
4 Pressure hose
5 Sealing ring
- Renew

6 Suction hose
7 Clamp
8 Vane pump
- Checking delivery pressure => Page 202
- Before installing fill with oil =>Note Page 259

satelettronica

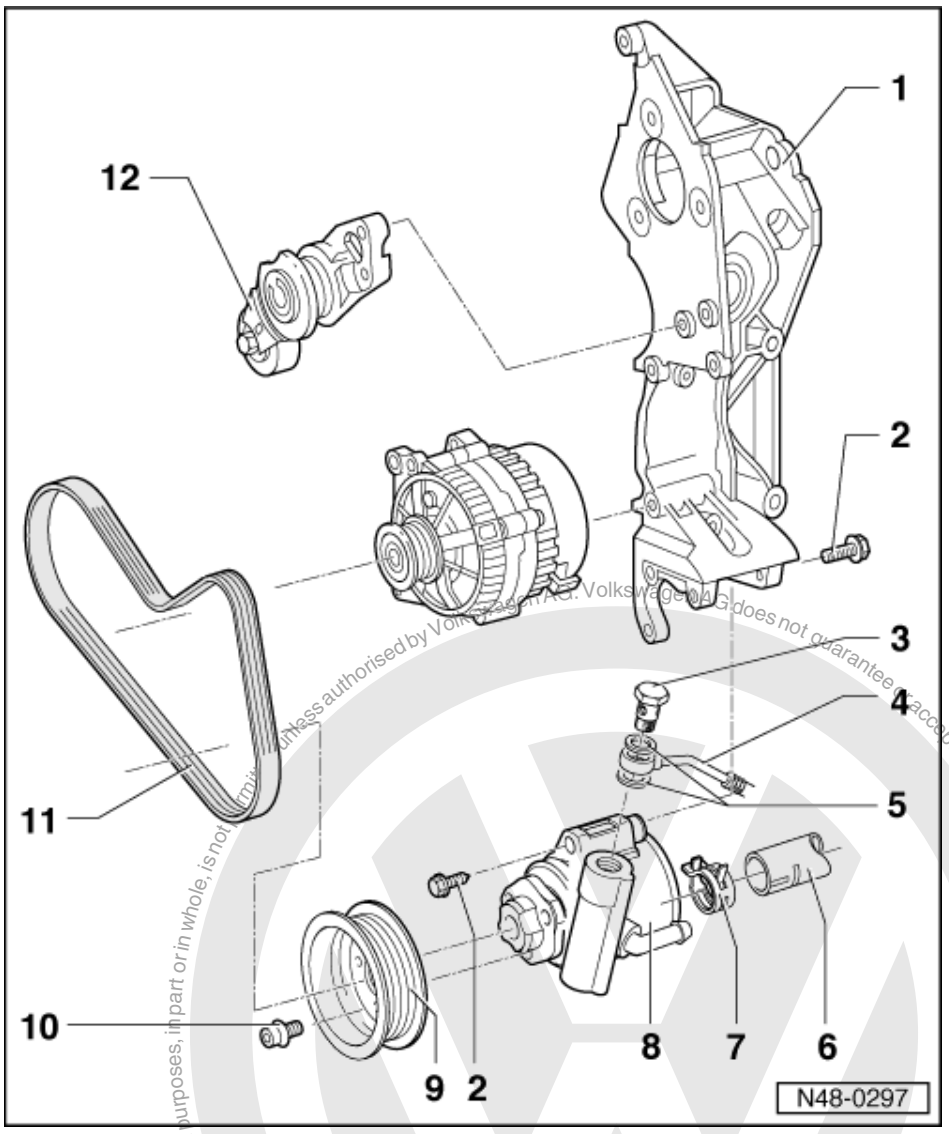

9 Belt pulley
10 Hexagon socket head bolt
- 25 Nm

11 Ribbed belt
- Mark D.O.R. before removing
- Allocation

=> Replacement parts catalogue

- Removing and belt routing

=> Repair group 13; Removing and installing ribbed belts Removing and installing ribbed belts

- Checking condition

=> Maintenance; Ribbed belts; Checking condition

12 Tensioning device for ribbed belt

satelettronica

5.6 - Assembly overview for high-mounted vane pump

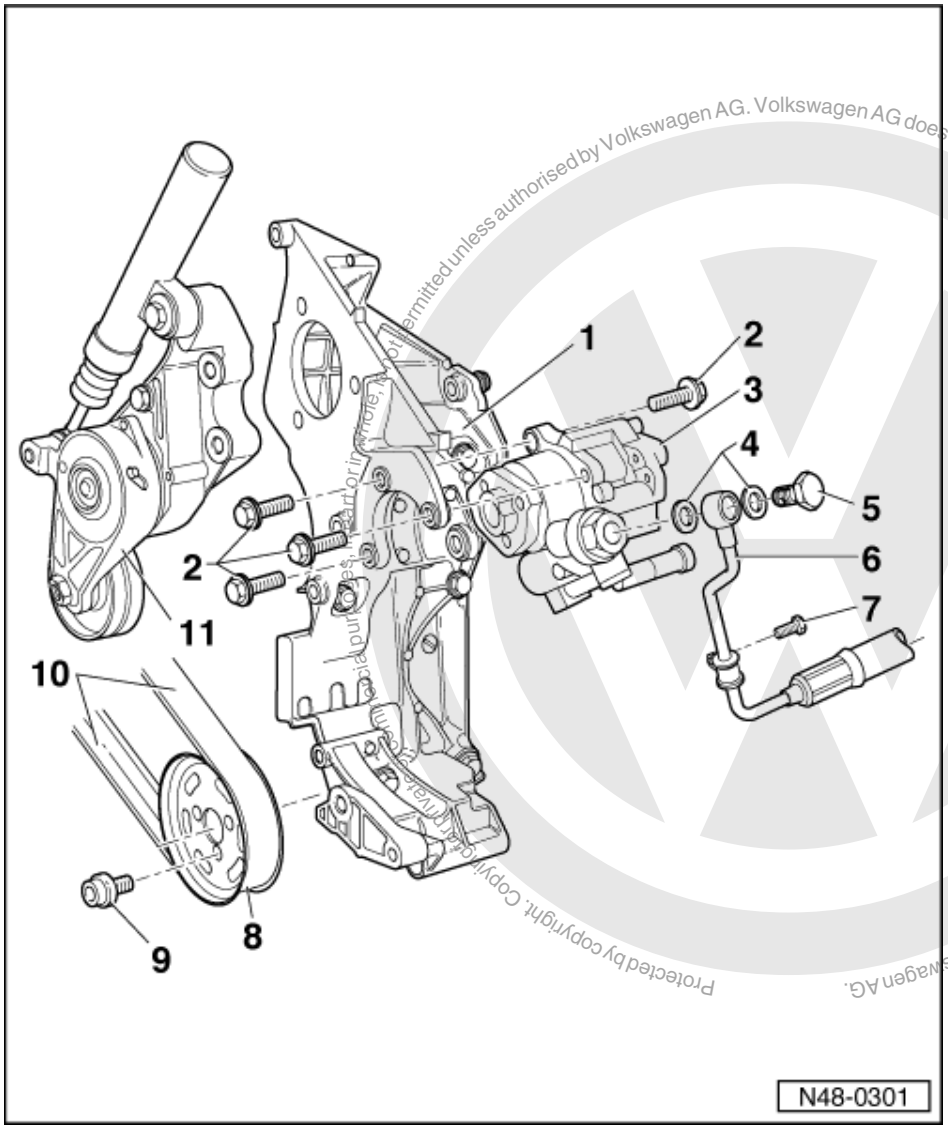

Protected by copyright. Copyright by Volkswagen AG. Volkswagen AG does not guarantee or accept any liability with respect to the correctness of information in this document. Copyright by Volkswagen AG. Reproduction, transmission or storage in whole or in part is not permitted unless authorised by Volkswagen AG.

satelettronica

Vehicles with high-mounted vane pump

1 Bracket
2 Hexagon bolt, 25 Nm
3 Vane pump
- Checking delivery pressure => Page 202
- Before installing fill with oil =>Note Page 259

4 Sealing ring
- Renew

5 Banjo bolt, 38 Nm
6 Pressure hose
7 Hexagon bolt, 22 Nm

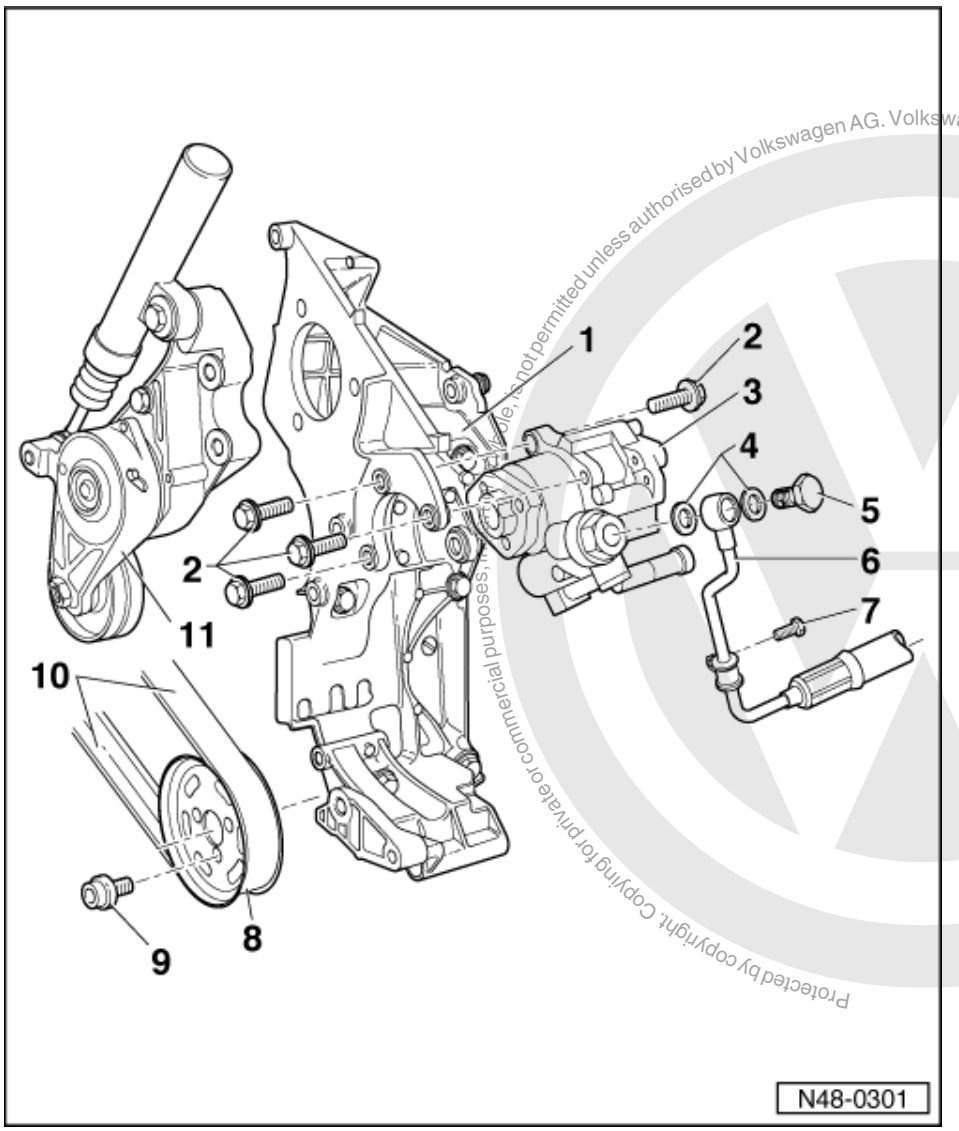

Protected by copyright. Copying for private or commercial purposes, in whole, is not permitted unless authorised by Volkswagen AG. Volkswagen AG does not guarantee or accept any liability with respect to the correctness of information in this document. Copyright by Volkswagen AG.
satelettronica

8 Belt pulley

9 Hexagon socket head bolt

- 25 Nm

10 Ribbed belt

- Mark D.O.R. before removing
- Allocation

=> Replacement parts catalogue

- Removing and belt routing

=> Repair group 13; Removing and installing ribbed belts Removing and installing ribbed belts

- Checking condition

=> Maintenance; Ribbed belts; Checking condition

11 Tensioning device for ribbed belt

6 - Definitions

6.1 - Definitions

These explanations refer only to this assembly group, Running gear, Axles, Steering. These definitions are not necessarily valid generally.

Part No.

Abbreviation for Part No.

Pr.-No.

Abbreviation of Product control Number. They identify, among other things, optional equipment, variations specific to certain countries and running gear information.

Rep.-Gr.

Abbreviation for repair group

Settling

Plastic (irreversible) forming of car springs through weight of vehicle.

Track

Offset adjustment of wheel plane to direction of travel.

Track angle difference

Difference between steering angle of inner and outer wheels during a turn.

Camber

Angle between wheel plane and a vertical to plane of road surface. It is positive when the top of the wheel leans outwards and negative when it leans inwards.

AF

Abbreviation for across flats.

Triple roller joint (tripod joint)

Widely used version of constant velocity joint with three rollers in the form of a star.

Protected by copyright. Copying for private or commercial purposes, in part or in whole, is not permitted unless authorised by Volkswagen AG. Volkswagen AG does not guarantee or accept any liability with respect to the correctness of information in this document. Copyright by Volkswagen AG.
satelettronica